This drawing, specifications, and concepts contained here in are the sole property of Dart Aerospace, and may not be reproduced or used in any fashion without the prior written permission of Dart Aerospace Eugene, OR.

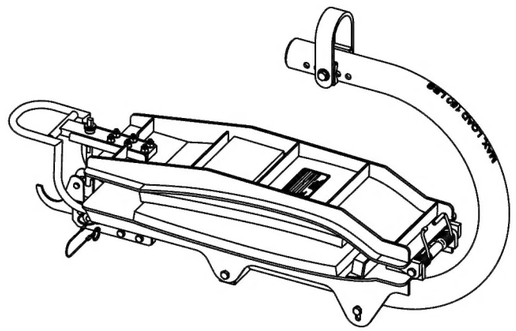

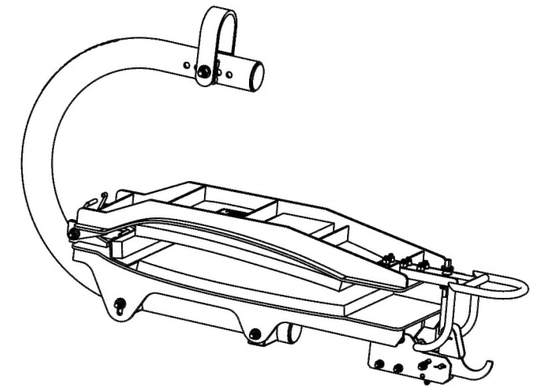

ASSY QTY	ASSY QTY	ASSY QTY	ASSY QTY	ASSY QTY	ASSY QTY	ASSY QTY	B/O	Part #	UNIT QTY	Description	Material	B/O INFORMATION OR SPECIFICATIONS	PG.
						X		-1	1	LOWER JAW WELDMENT			4
						2		-3		LOWER JAW SIDE PLATE	6061		5
						1		-5		LOWER JAW FACE PLATE	5052		6
						1		-7		LOWER JAW LATCH PLATE	6061		7
						1		-9		LOWER JAW ANGLE	5052		8
					2	2		-11		HINGE PLATE	6061		9
					4	5		-13		LOWER JAW BRACE	6061		10
					X			-15	1	UPPER JAW WELDMENT			11
					2			-17		UPPER JAW SIDE PLATE	6061		12
					1			-19		UPPER JAW PLATE	5052		13
					1			-21		ANGLE BRACE	6063		14
					1			-23		ANGLE BRACE 2	6063		15
					2			-25		UPPER JAW BRACE, SHORT	6061		16
				X				-27	1	HANDLE WELDMENT			17
				1				-29		HANDLE	6063		18
				2				-31		HANDLE ARM	6063		19
				1				-33		HANDLE BRACE	6063		20
				1				-35		LATCH BLOCK	6061		21
			X					-37	1	HOOK WELDMENT			22
			1					-39		ROD	304 S.S.		23
			1					-41		HOOK	304 S.S.		24
		X						-43	1	LATCH WELDMENT			25
		1						-45		LATCH CATCH	5052		26
		1						-47		LATCH HOOK	6061		27
								-49	2	LATCH BRACKET	6061		28
	X							-50	1	LIFT ARM WELDMENT			29
	1							-51		LIFT ARM	6061		30
	2							-52		LIFT ARM END CAP	6061		31
								-53	1	CLEVIS	A-36 P & O		32
								-55	2	SPACER BLOCK	6061		33
								-57	4	HANDLE BLOCK	6061		34
								-59	1	HINGE SPACER	6061		35
								-61	1	SHORT HINGE SPACER	6061		36
							B/O	-63	2	FOAM	T-20	3/4 X 8 X 15-1/8 (CASE SOLUTIONS)	37
							B/O	-65	1	FOAM, ANGLE BLOCK	T-20	3/4 X 1-1/8 X 8 (CASE SOLUTIONS)	38
							B/O	-67	2	FOAM BACKING	NEOPRENE	1/8 X 8 X 15-1/4 GASKET SPECIALITY	39
X								-69	2	SPRING ASSEMBLY			40
1							B/O	-71		SPRING	S.S.	DENDOFF	41
1								-73		TUBE, LONG	NYLON	Ø1/4 OD .17 ID X1-3/8 (MCMASTER-CARR #5548K64)	42
1								-75		TUBE, LONG	NYLON	Ø1/4 OD .17 ID X 1/2 (MCMASTER-CARR #5548K64)	43
							B/O	-77	1	STICKER	VINYL, BLACK	TEXT: ARIAL HT; 1/2 SIGNS NOW	44
ASSY -69	ASSY -50	ASSY -43	ASSY -37	ASSY -27	ASSY -15	ASSY -1							

ASSY QTY	ASSY QTY	ASSY QTY	ASSY QTY	ASSY QTY	ASSY QTY	ASSY QTY	B/O	Part #	UNIT QTY	Description	Material	B/O INFORMATION OR SPECIFICATIONS	PG.
							B/O	-81	2	BOLT	STEEL	5/16-24 X 7 (MCMASTER-CARR #91257A453)	3
							B/O	-83	1	BOLT	STEEL	5/16-24 X 6-1/2 (MCMASTER-CARR #91257A451)	3
							B/O	-85	3	LOCK NUT	STEEL	5/16-24 (MCMASTER-CARR #97135A225)	3
							B/O	-87	3	WASHER	STEEL	Ø5/16 (MCMASTER-CARR #90126A030)	3
							B/O	-89	5	BOLT	STEEL	1/4-28 X 1-1/4 (MCMASTER-CARR #91286A138)	3
							B/O	-91	6	MACHINE SCREW	S.S.	1/4-28 X 1-1/4 (MCMASTER-CARR #91771A563)	3
							B/O	-93	5	LOCK NUT	STEEL	1/4-28 (MCMASTER-CARR #97135A215)	3
							B/O	-95	16	WASHER	STEEL	1/4 (MCMASTER-CARR #95229A420)	3
							B/O	-97	2	SPACER	AL	Ø1/2 X 1/8 (MCMASTER-CARR #92510A760)	3
							B/O	-99	1	BOLT	STEEL	3/8-24 X 3-3/4 (MCMASTER-CARR #91257A464)	3
							B/O	-101	1	LOCK NUT	STEEL	3/8-24 (MCMASTER-CARR #97135A235)	3
							B/O	-103	2	WASHER	STEEL	3/8 (MCMASTER-CARR #98023A031)	3
							B/O	-105	2	THUMB NUT	S.S.	3/8-16 (MCMASTER-CARR #95150A190)	3
							B/O	-107	1	CLEVIS PIN	S.S.	Ø1/4 X 1 (MCMASTER-CARR #92390A159)	3
							B/O	-109	1	CLEVIS PIN	S.S.	Ø1/4 X 1-1/8 (MCMASTER-CARR #92390A160)	3
							B/O	-111	1	SPACER	STEEL	Ø1/2 OD X Ø1/4 ID X 3/4 (MCMASTER-CARR #92415A867)	3
								-113	1	LATCH SPRING	302 S.S.	Ø.25 OD X Ø.026 X 2 (MCMASTER-CARR #9665K85) MODIFIED	45
							B/O	-115	1	BALL LOCK PIN	S.S.	Ø1/4 X 3/4 (MCMASTER-CARR #92384A033)	3
							B/O	-117	2	COTTER PIN	STEEL	Ø1/16 X 3/4 (MCMASTER-CARR #98338A105)	3
							B/O	-123	4	#2 DRIVE SCREW	COATED STEEL	1/8 (MCMASTER-CARR #90081A074)	3
							B/O	-125	1	LANYARD	STEEL	Ø1/16 X 6 (CARR LANE #CL2C)	3
							B/O	-127	2	FERRULE	ALUMINUM	Ø1/16 X 3/8 (MCMASTER-CARR #3896T31)	3
							B/O	-129	1	SPLIT RING	STEEL	Ø7/8 (MCMASTER-CARR #90177A217)	3
							B/O	-131	6	THIN LOCK NUT	STEEL	1/4-28 (SPENCER AIRCRAFT #MS21083-N4)	3
							B/O	-133	1	FOAM PAD	Y20 BLACK	1 X 3-3/4 X 5 IR SPECIALTIES	46
									1	DART PLACARD	ALUMINUM	#RB41011	3
ASSY -69	ASSY -50	ASSY -43	ASSY -37	ASSY -27	ASSY -15	ASSY -1							

DART AEROSPACE

TITLE: TOOL, M/R BLADE LIFTING

DWG NO.: RBW6205G00632-3G — REV: 6

MAT'L
HEAT TREAT
FINISH
SPEC

UNLESS OTHERWISE SPECIFIED
DIMENSIONS ARE IN INCHES
.XXX ± .005 FRACTIONS ± 1/8
.XX ± .01 ANGLES ±.5°
.X ± .1 SURFACES = 125
1. BREAK ALL SHARP EDGES .015 x 45° OR .015R
2. DIMENSIONAL LIMITS APPLY AFTER PLATING
3. INTERPRET DIM AND TOL PER ASME Y14.5M-2009

DRAWN BY:	GILBERT
CHECKED:	CLOUGH
OPPS APPR:	ANDERSON
QA APPR:	LINDSAY
APPROVED:	GILBERT

USED ON MODEL: AW139

SCALE: 1:6 — DATE: 2/21/2013 — SHEET 1 OF 47

This drawing, specifications, and concepts contained here in are the sole property of Dart Aerospace, and may not be reproduced or used in any fashion without the prior written permission of Dart Aerospace Eugene, OR.

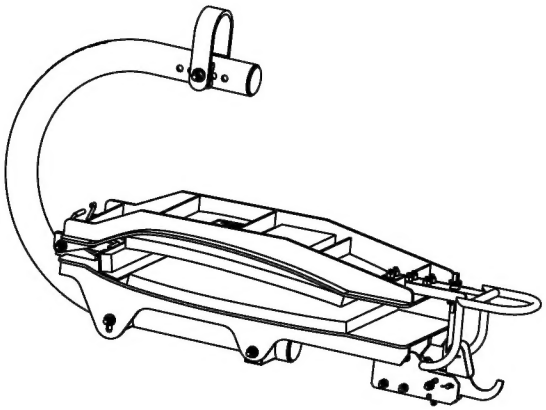

REVISIONS

REV	ECR	DESCRIPTION	DATE	INITIAL	APPROVED
1		**-1** ADDED TOLERANCE WAS .945 IS .945±.03, WAS 5.950 IS 5.950±.03. **-15** ADDED TOLERANCE WAS .945 IS .945±.03, WAS 5.950 IS 5.950±.03. CH'D TOLERANCE WAS 3.170 IS 3.17, WAS 2.580 IS 2.58. **-39** CH'D THREAD WAS 3/8-24 IS 3/8-16. **-45** ADDDED TOLERANCE WAS .76 IS .76 +.03-.00. **-53** CH'D WIDTH TOLERANCE WAS 2.500 +.010 -.000 IS 2.500 +.05 -.00,CH'D HIEGHT WAS 1.375 IS 1.250, CH'D HOLE LOCATION WAS .688 IS .625, RADIUS WAS .69 IS .63, CH'D THICKNESS WAS .313 IS .25. **-63** AND **-65** CHANGED MATERIAL NOTE IN BOM. **-71** ADDED NOTE 1 FOR ADDITIONAL SPRING INFORMATION. MATERIAL WAS STEEL IS S.S. **-75** ADDED MISSING P/N BUBBLE. **-93** CH'D QTY. WAS 11 IS 5. **-113** ADDED DRAWING TO MANUFACTURE PART. **-131** ADDED 6 NUTS.	7/1/2013	CFS	JAG
2		**-13** CH'D DIM WAS 5.90 IS 5.950±.030. **-45** ADDED AUX VIEW A-A & MISSING DIMS 2X R.50, 20°. **-71** ADDED NOTE 2 FOR ADDITIONAL SPRING INFORMATION. **-91** CH'D B/O INFO WAS MCMASTER-CARR #91771A562 IS MCMASTER-CARR #91771A563. DELETED **-119** & REPLACED WITH **-52**, ADDED **-50** LIFT ARM WELDMENT.	4/23/2014	DPD	GE
3	15-0017	UPDATED TO NEW DRAWING SATNDARD. **-1** AND **-15** CH'D WELD FROM 2-5 AND 1-3 TO SKIP WELD AS NECESSARY NOTE. **-11** CH'D DIM WAS 1.219 IS 1.22, WAS R.25 IS R.38, ADDED NOTHCHED TO AID IN POSITIONING. **-21**, **-23** CH'D MATERIAL WAS 6061 IS 6063. **-39** ADDED MISSING DIMENSION 2X R.03. **-71** WIRE DIAMETER CH'D PER DENDOFF WAS Ø.155 IS Ø.170. **-73** AND **-75** CH'D TUBE ID WAS Ø.150 IS Ø.170, P/N WAS 5548K918 IS 5548K64. **-133** ADDED FOAM PAD.	1/20/2015	RJC	JAG
4	15-0337	CH'D TOLERANCE ON ALL NON-CRITICAL DIMS. **-3**, **-7**, **-9**, **-17**, **-21**, **-23**, **-25**, **-29**, **-31** **-33**, **-37**, **-39**, **-41**, **-43**, **-47**, **-49**, **-52**, **-53**, **-59**, **-61**, **-63**, **-65**, **-67**, **-73**, **-75**, **-113**, **-133** CH'D TO SHEET METAL TOLERANCE. **-51** CH'D DIMS WAS 4X .775 ±.010 IS 4X .775 ±.06, WAS 9.875 IS 9.875 ±.06, WAS 14.313 IS 14.313 ±.25. CH'D TO SHEET METAL TOLERANCE. **-63** CH'D QTY. WAS 1 IS 2. **-71** DELETED NOTES 1 AND 2. **-121** DELETED. ADDED DART PLACARD RB41011.	10/26/2015	RJC	JAG
5	16-0164	UPDATED TO NEW STANDARDS. **-1**, **-15**, **-27**, **-43**, **-49**, **-50**, **-53**, **-55**, **-57** REMOVED FINISH SPEC. **-15** CH'D DIM WAS 1.250+.030/-.000 IS 1.28+.03/-.00, WAS 3.17 IS 3.16. **-29** CH'D DIM WAS R1.00 IS R1.50. **-50** CH'D SHEET TOL WAS ±.005/±.01/±.1 IS ±.010/±.03/±.1. **-63** CH'D B/O INFO WAS 3/4 X 8 X 15-1/8 I.R. SPECIALTIES IS 3/4 X 8 X 15-1/8 (CASE SOLUTIONS). **-65** CH'D B/O INFO WAS 3/4 X 1-1/8 X 8 I.R. SPECIALTIES IS 3/4 X 1-1/8 X 8 (CASE SOLUTIONS)	10/12/2016	SM	JAG
6	17-0031	**-1** ADDED DIM 2X .33 NO WELD OUTSIDE. **-3** ADDED DIM 2X FULL R. **-7** ADDED DIM 6X FULL R. **-9** ADDED DIM R.06. **-13** CH'D DIM WAS 5.950±0.30 IS 5.95. **-15** DIMENSION ADDED 2X .33 NO WELD INSIDE; CH'D DIM WAS .945±.03 IS .945±.030, WAS 5.950±.03 IS 5.950±.030. **-29** CH'D DIM WAS R1.50 IS 2X R1.50. **-31** CH'D DIM WAS R.25 IS SR.25. **-51** CH'D DIM WAS 4X .775±.06 IS 4X .78, WAS 9.875±.06 IS 9.88, WAS 14.313±.25 IS 14.563/14.063. **-53** CH'D DIM WAS 2.500+.05/-.00 IS 2.55/2.50. **-57** CH'D DIM WAS Ø.41 THRU ALL ⌵ Ø.45X90°, NEAR SIDE ⌵ Ø.45X90°, FAR SIDE IS Ø.41 THRU ALL ⌵ Ø.45X90°, BOTH SIDES; WAS 1.97 IS 1.94. **-59** CH'D DIM WAS Ø.50 IS Ø.500. **-61** CH'D DIM WAS Ø.53 IS Ø.527. **-63**, **-65**, **-65** CH'D MAT'L WAS 17124 IS T-20.	1/24/2017	SM	JAG

DART AEROSPACE

TITLE
TOOL, M/R BLADE LIFTING

DWG NO. RBW6205G00632-3G REV 6

MAT'L
HEAT TREAT
FINISH
SPEC

UNLESS OTHERWISE SPECIFIED
DIMENSIONS ARE IN INCHES
.XXX ± .005 FRACTIONS ± 1/8
.XX ± .01 ANGLES ±.5°
.X ± .1 SURFACES = 125√
1. BREAK ALL SHARP EDGES .015 x 45° OR .015R
2. DIMENSIONAL LIMITS APPLY AFTER PLATING
3. INTERPRET DIM AND TOL PER ASME Y14.5M-2009

DRAWN BY:	GILBERT
CHECKED:	CLOUGH
OPPS APPR:	ANDERSON
QA APPR:	LINDSAY
APPROVED:	GILBERT

USED ON MODEL
AW139

SCALE 1:12 DATE 2/21/2013 SHEET 2 OF 47

This drawing, specifications, and concepts contained here in are the sole property of Dart Aerospace, and may not be reproduced or used in any fashion without the prior written permission of Dart Aerospace Eugene, OR.

REVISIONS					
REV	ECR	DESCRIPTION	DATE	INITIAL	APPROVED
2		**-119** REPLACED WITH **-52**, ADDED **-50** LIFT ARM WELDMENT.	4/23/2014	DPD	DW
3	15-0017	**-133** ADDED FOAM PAD.	1/20/2015	RJC	JAG
4	15-0337	**-121** DELETED. ADDED DART PLACARD RB41011.	10/26/2015	RJC	JAG

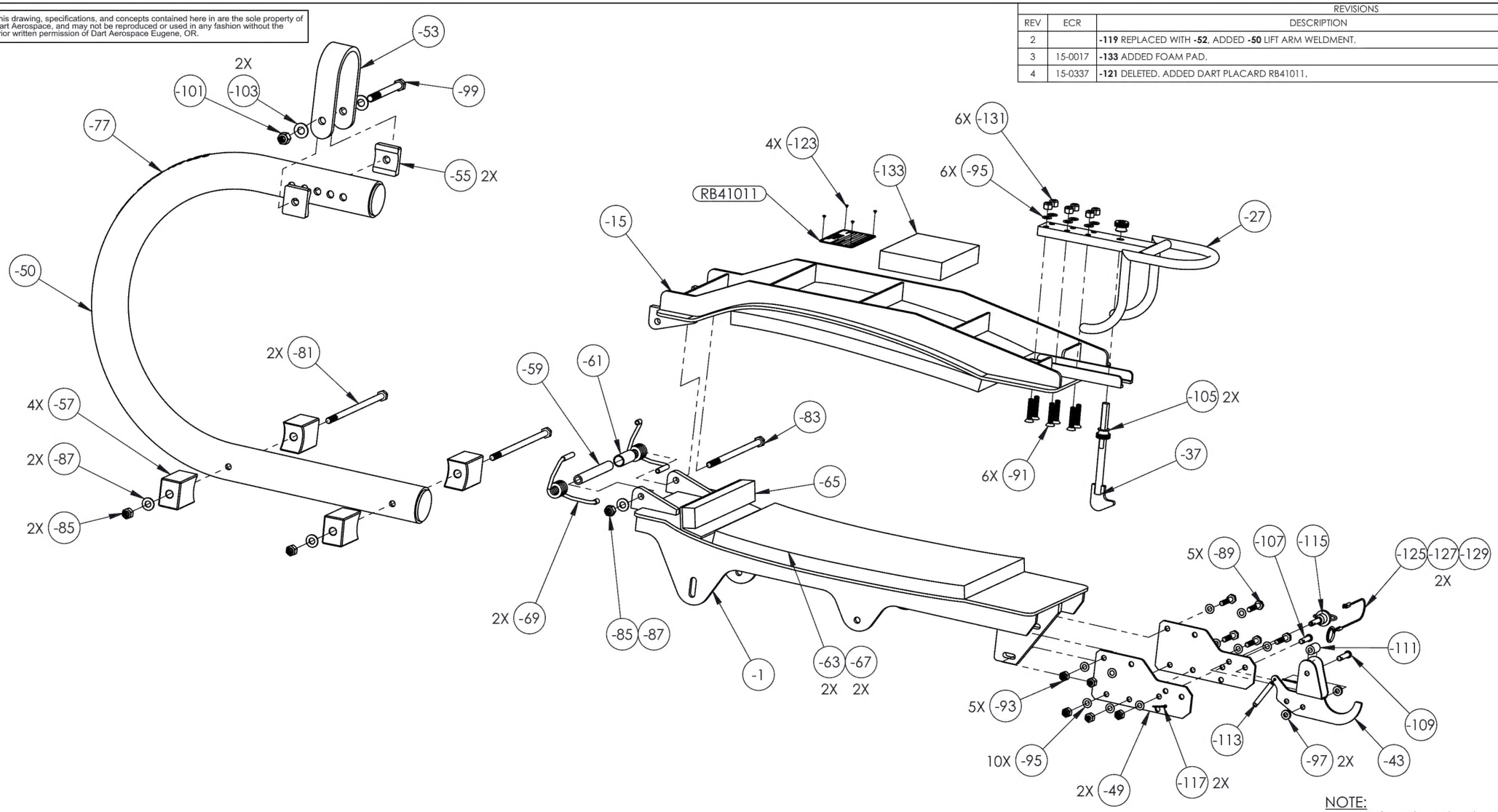

NOTE:
1. ATTACH FOAMS -63, -65, -67 & -133 USING AN APPROPRIATE ADHESIVE.

DART AEROSPACE

TITLE	TOOL, M/R BLADE LIFTING		
DWG NO.	RBW6205G00632-3G		REV 6
MAT'L		UNLESS OTHERWISE SPECIFIED DIMENSIONS ARE IN INCHES	
HEAT TREAT		.XXX ± .005 FRACTIONS ± 1/8	
FINISH		.XX ± .01 ANGLES ±.5°	
SPEC		.X ± .1 SURFACES = 125	
DRAWN BY:	GILBERT	1. BREAK ALL SHARP EDGES .015 x 45° OR .015R	
CHECKED:	CLOUGH	2. DIMENSIONAL LIMITS APPLY AFTER PLATING	
OPPS APPR:	ANDERSON	3. INTERPRET DIM AND TOL PER ASME Y14.5M-2009	
QA APPR:	LINDSAY	USED ON MODEL	
APPROVED:	GILBERT	AW139	
SCALE 1:6	DATE 2/21/2013	SHEET 3 OF 47	

This drawing, specifications, and concepts contained here in are the sole property of Dart Aerospace, and may not be reproduced or used in any fashion without the prior written permission of Dart Aerospace Eugene, OR.

REVISIONS

REV	ECR	DESCRIPTION	DATE	INITIAL	APPROVED
1		**-1** ADDED TOLERANCE WAS .945 IS .945±.03, WAS 5.950 IS 5.950±.03.	7/1/2013	CFS	JAG
3	15-0017	**-1** CH'D WELD FROM 2-5 AND 1-3 TO SKIP WELD AS NECESSARY NOTE.	1/20/2015	RJC	JAG
5	16-0164	**-1** REMOVED FINISH SPEC.	10/12/2016	SM	JAG
6	17-0031	**-1** ADDED DIM 2X .33 NO WELD OUTSIDE.	1/24/2017	SM	JAG

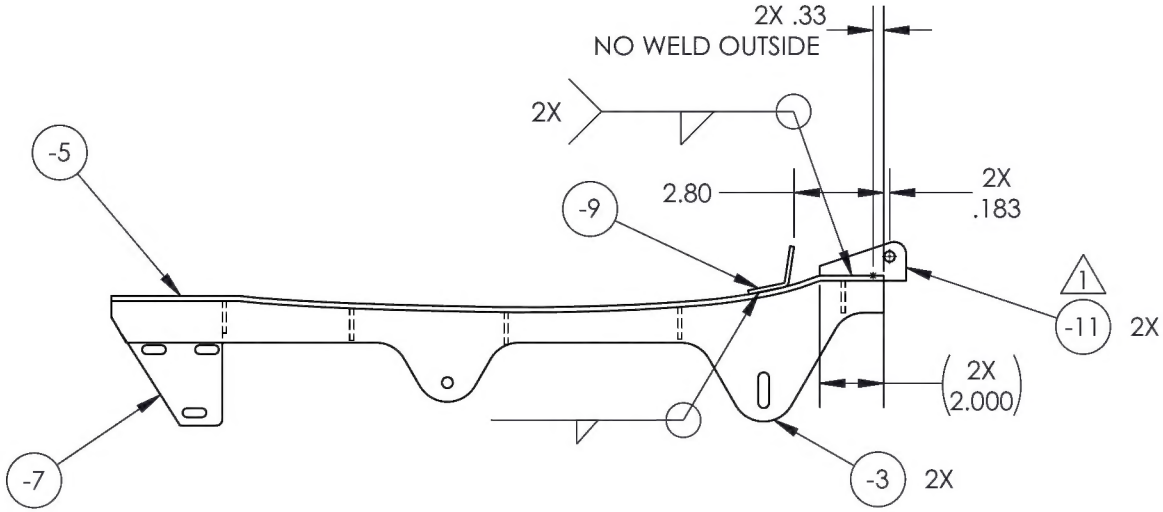

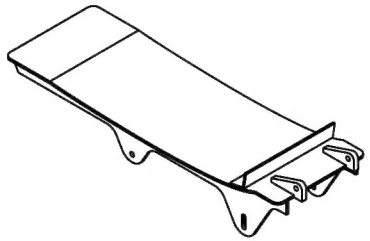

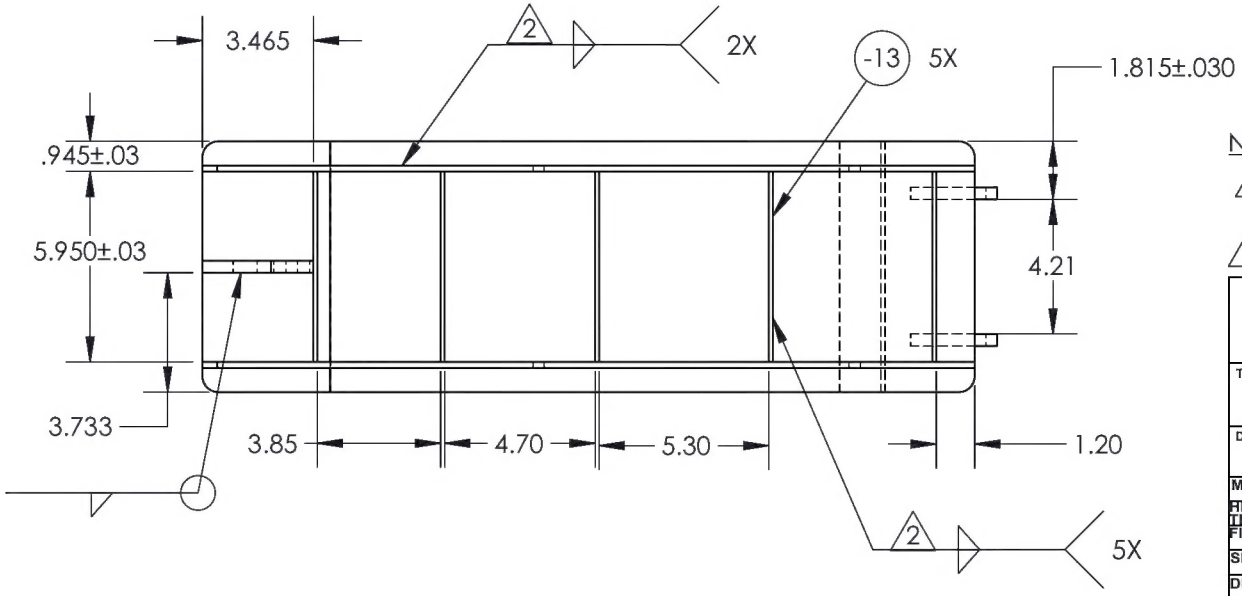

-1

LOWER JAW WELDMENT

NOTES:

1. USE WELD FIXTURE TO ALIGN TWO HINGE PLATES -11 TO PLATE -5.
2. SKIP WELD AS NECESSARY.

DART AEROSPACE

TITLE: TOOL, M/R BLADE LIFTING

DWG NO. RBW6205G00632-3G-1 REV 6

MAT'L
HEAT TREAT
FINISH POWDER COAT RED
SPEC

UNLESS OTHERWISE SPECIFIED
DIMENSIONS ARE IN INCHES
.XXX ± .010 FRACTIONS ± 1/8
.XX ± .03 ANGLES ±1°
.X ± .1 SURFACES = 125
1. BREAK ALL SHARP EDGES .015 x 45° OR .015R
2. DIMENSIONAL LIMITS APPLY AFTER PLATING
3. INTERPRET DIM AND TOL PER ASME Y14.5M-2009

DRAWN BY:	GILBERT
CHECKED:	CLOUGH
OPPS APPR:	ANDERSON
QA APPR:	LINDSAY
APPROVED:	GILBERT

USED ON MODEL: AW139

SCALE 1:6 | DATE 2/26/2013 | SHEET 4 OF 47

This drawing, specifications, and concepts contained here in are the sole property of Dart Aerospace, and may not be reproduced or used in any fashion without the prior written permission of Dart Aerospace Eugene, OR.

REVISIONS

REV	ECR	DESCRIPTION	DATE	INITIAL	APPROVED
4	15-0337	**-3** CH'D TO SHEET METAL TOLERANCE.	10/26/2015	RJC	JAG
6	17-0031	**-3** ADDED DIM 2X FULL R.	1/24/2017	SM	JAG

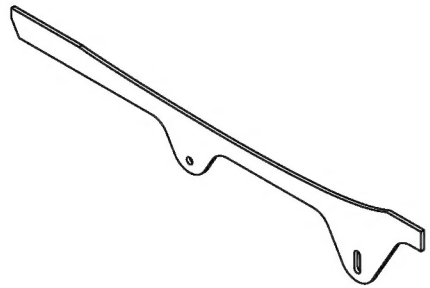

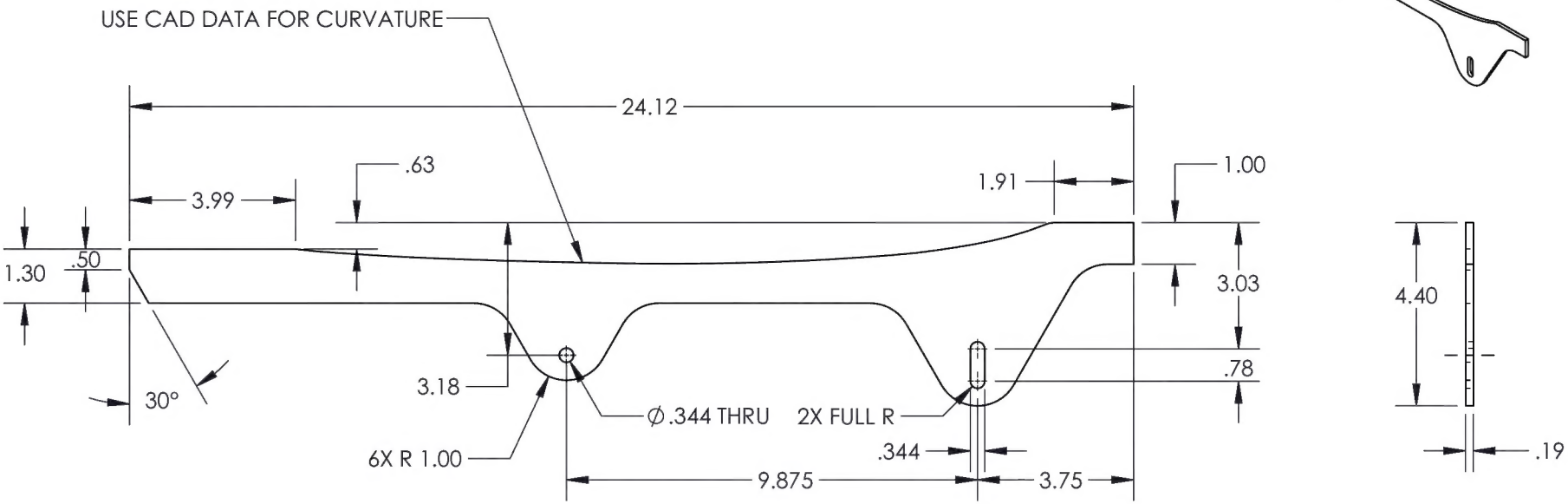

-3

LOWER JAW SIDE PLATE

DART AEROSPACE

TITLE: TOOL, M/R BLADE LIFTING

DWG NO. RBW6205G00632-3G-3 REV 6

MAT'L 6061

HEAT TREAT

FINISH SEE -1 WELDMENT

SPEC

DRAWN BY: GILBERT

CHECKED: CLOUGH

OPPS APPR: ANDERSON

QA APPR: LINDSAY

APPROVED: GILBERT

UNLESS OTHERWISE SPECIFIED
DIMENSIONS ARE IN INCHES
.XXX ± .010 FRACTIONS ± 1/8
.XX ± .03 ANGLES ±1°
.X ± .1 SURFACES = 125√

1. BREAK ALL SHARP EDGES .015 x 45° OR .015R
2. DIMENSIONAL LIMITS APPLY AFTER PLATING
3. INTERPRET DIM AND TOL PER ASME Y14.5M-2009

USED ON MODEL: AW139

SCALE 1:4 DATE 2/18/2013 SHEET 5 OF 47

This drawing, specifications, and concepts contained here in are the sole property of Dart Aerospace, and may not be reproduced or used in any fashion without the prior written permission of Dart Aerospace Eugene, OR.

REVISIONS

REV	ECR	DESCRIPTION	DATE	INITIAL	APPROVED

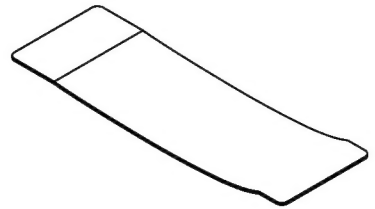

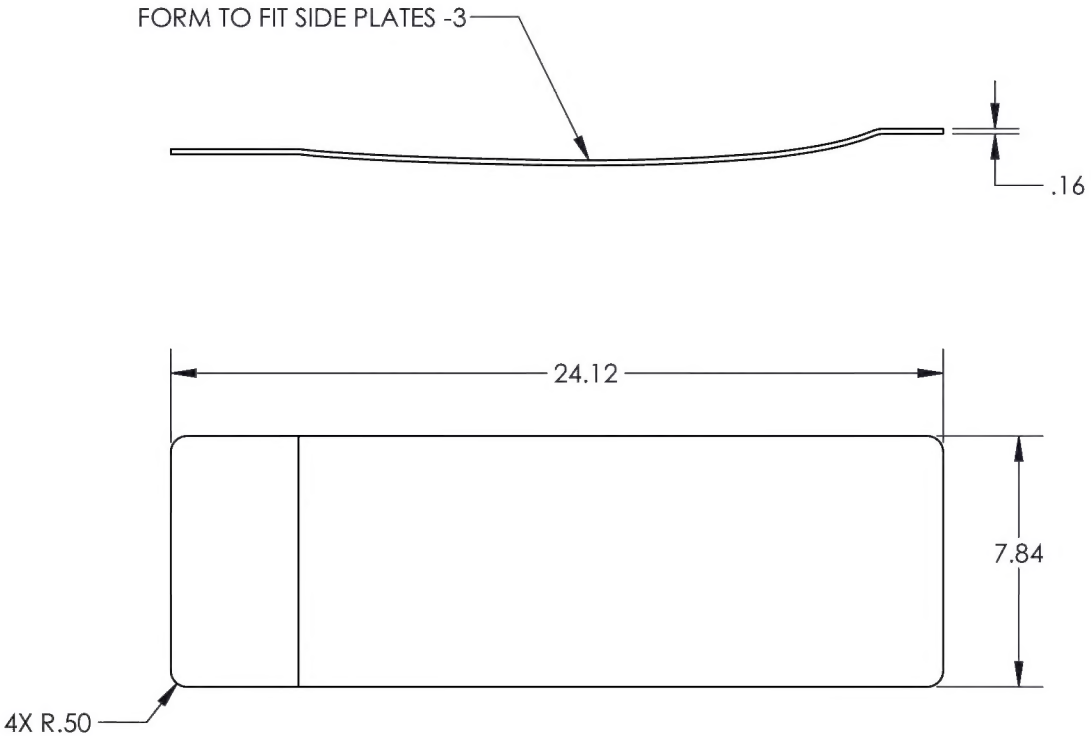

-5

LOWER JAW FACE PLATE

DART AEROSPACE

TITLE: TOOL, M/R BLADE LIFTING

DWG NO. RBW6205G00632-3G-5 REV 6

MAT'L 5052
HEAT TREAT
FINISH SEE -1 WELDMENT
SPEC

DRAWN BY: GILBERT
CHECKED: CLOUGH
OPPS APPR: ANDERSON
QA APPR: LINDSAY
APPROVED: GILBERT

UNLESS OTHERWISE SPECIFIED
DIMENSIONS ARE IN INCHES
.XXX ± .010 FRACTIONS ± 1/8
.XX ± .03 ANGLES ±1°
.X ± .1 SURFACES = 125√
1. BREAK ALL SHARP EDGES .015 x 45° OR .015R
2. DIMENSIONAL LIMITS APPLY AFTER PLATING
3. INTERPRET DIM AND TOL PER ASME Y14.5M-2009

USED ON MODEL: AW139

SCALE 1:6 DATE 2/18/2013 SHEET 6 OF 47

This drawing, specifications, and concepts contained here in are the sole property of Dart Aerospace, and may not be reproduced or used in any fashion without the prior written permission of Dart Aerospace Eugene, OR.

REVISIONS

REV	ECR	DESCRIPTION	DATE	INITIAL	APPROVED
4	15-0337	**-7** CH'D TO SHEET METAL TOLERANCE.	10/26/2015	RJC	JAG
6	17-0031	**-7** ADDED DIM 6X FULL R.	1/24/2017	SM	JAG

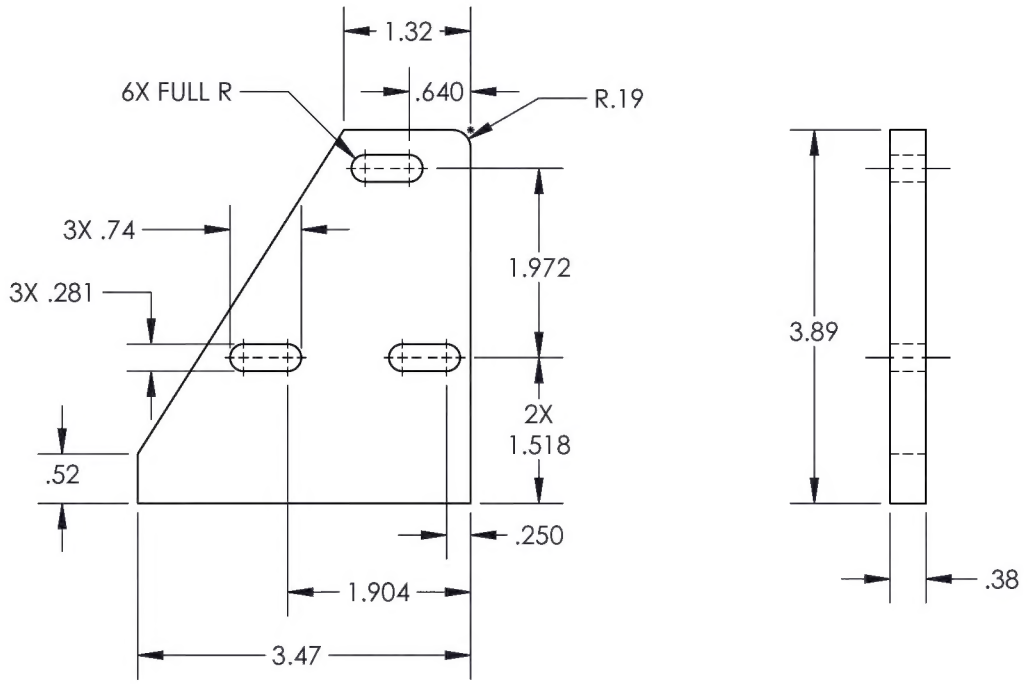

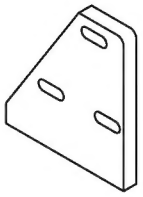

-7

LOWER JAW LATCH PLATE

DART AEROSPACE

TITLE
TOOL, M/R BLADE LIFTING

DWG NO. RBW6205G00632-3G-7 REV 6

MAT'L 6061
HEAT TREAT
FINISH SEE -1 WELDMENT
SPEC

DRAWN BY: GILBERT
CHECKED: CLOUGH
OPPS APPR: ANDERSON
QA APPR: LINDSAY
APPROVED: GILBERT

UNLESS OTHERWISE SPECIFIED
DIMENSIONS ARE IN INCHES
.XXX ± .010 FRACTIONS ± 1/8
.XX ± .03 ANGLES ±1°
.X ± .1 SURFACES = 125√
1. BREAK ALL SHARP EDGES .015 x 45° OR .015R
2. DIMENSIONAL LIMITS APPLY AFTER PLATING
3. INTERPRET DIM AND TOL PER ASME Y14.5M-2009

USED ON MODEL
AW139

SCALE 1:2 DATE 2/21/2013 SHEET 7 OF 47

This drawing, specifications, and concepts contained here in are the sole property of Dart Aerospace, and may not be reproduced or used in any fashion without the prior written permission of Dart Aerospace Eugene, OR.

REVISIONS

REV	ECR	DESCRIPTION	DATE	INITIAL	APPROVED
4	15-0337	**-9** CH'D TO SHEET METAL TOLERANCE.	10/26/2015	RJC	JAG
6	17-0031	**-9** ADDED DIM R.06.	1/24/2017	SM	JAG

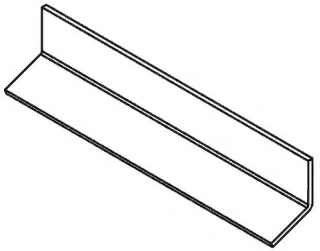

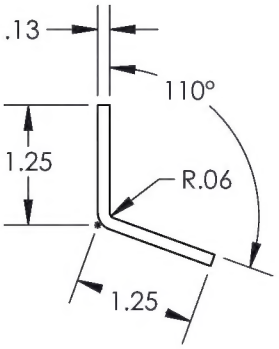

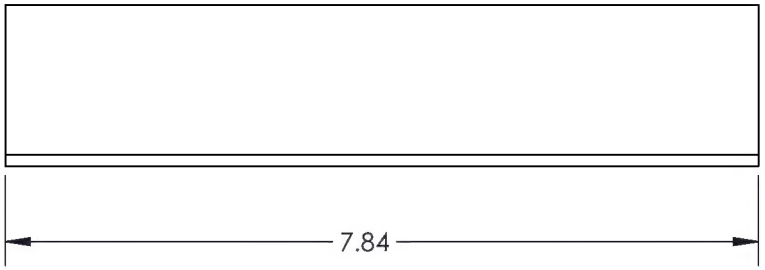

(-9)

LOWER JAW ANGLE

DART AEROSPACE

TITLE
TOOL, M/R BLADE LIFTING

DWG NO. RBW6205G00632-3G-9 REV 6

MAT'L	5052	
HEAT TREAT		
FINISH	SEE -1 WELDMENT	
SPEC		
DRAWN BY:	GILBERT	
CHECKED:	CLOUGH	
OPPS APPR:	ANDERSON	
QA APPR:	LINDSAY	
APPROVED:	GILBERT	

UNLESS OTHERWISE SPECIFIED
DIMENSIONS ARE IN INCHES
.XXX ± .010 FRACTIONS ± 1/8
.XX ± .03 ANGLES ±1°
.X ± .1 SURFACES = 125√
1. BREAK ALL SHARP EDGES .015 x 45° OR .015R
2. DIMENSIONAL LIMITS APPLY AFTER PLATING
3. INTERPRET DIM AND TOL PER ASME Y14.5M-2009

USED ON MODEL
AW139

SCALE 1:2 | DATE 2/27/2013 | SHEET 8 OF 47

This drawing, specifications, and concepts contained here in are the sole property of Dart Aerospace, and may not be reproduced or used in any fashion without the prior written permission of Dart Aerospace Eugene, OR.

REVISIONS

REV	ECR	DESCRIPTION	DATE	INITIAL	APPROVED
3	15-0017	**-11** CH'D DIM WAS 1.219 IS 1.22, WAS R.25 IS R.38, ADDED NOTHCHED TO AID IN POSITIONING.	1/20/2015	RJC	JAG

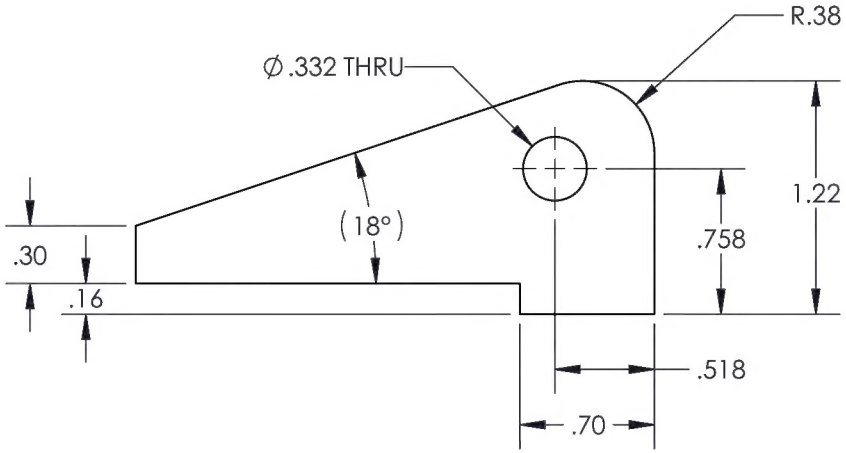

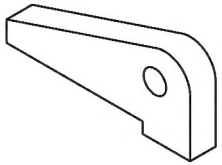

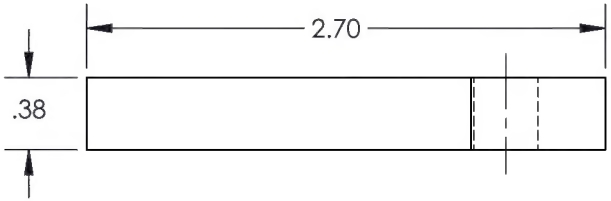

-11

HINGE PLATE

DART AEROSPACE

TITLE: TOOL, M/R BLADE LIFTING

DWG NO. RBW6205G00632-3G-11 REV 6

MAT'L 6061

HEAT TREAT

FINISH SEE -1 & -15 WELDMENT

SPEC

DRAWN BY: GILBERT

CHECKED: CLOUGH

OPPS APPR: ANDERSON

QA APPR: LINDSAY

APPROVED: GILBERT

UNLESS OTHERWISE SPECIFIED
DIMENSIONS ARE IN INCHES
.XXX ± .010 FRACTIONS ± 1/8
.XX ± .03 ANGLES ±1°
.X ± .1 SURFACES = 125√

1. BREAK ALL SHARP EDGES .015 x 45° OR .015R
2. DIMENSIONAL LIMITS APPLY AFTER PLATING
3. INTERPRET DIM AND TOL PER ASME Y14.5M-2009

USED ON MODEL: AW139

SCALE 1:1 | DATE 2/21/2013 | SHEET 9 OF 47

This drawing, specifications, and concepts contained here in are the sole property of Dart Aerospace, and may not be reproduced or used in any fashion without the prior written permission of Dart Aerospace Eugene, OR.

REVISIONS

REV	ECR	DESCRIPTION	DATE	INITIAL	APPROVED
2		**-13** CH'D DIM WAS 5.90 IS 5.950±.030.	4/23/2014	DPD	GE
6	17-0031	**-13** CH'D DIM WAS 5.950±0.30 IS 5.95.	1/24/2017	SM	JAG

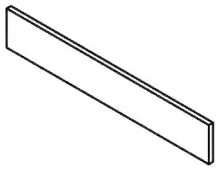

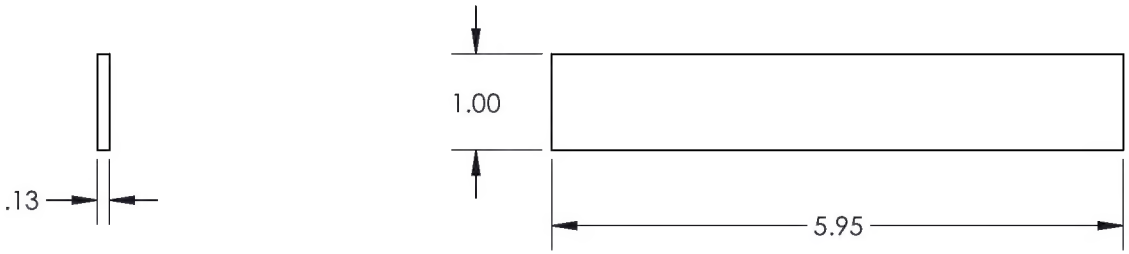

-13

LOWER JAW BRACE

DART AEROSPACE

TITLE TOOL, M/R BLADE LIFTING

DWG NO. RBW6205G00632-3G-13 REV 6

MAT'L 6061		UNLESS OTHERWISE SPECIFIED DIMENSIONS ARE IN INCHES .XXX ± .010 FRACTIONS ± 1/8 .XX ± .03 ANGLES ±1° .X ± .1 SURFACES = 125√
HEAT TREAT		
FINISH SEE -1 & -15 WELDMENT		
SPEC		
DRAWN BY:	GILBERT	1. BREAK ALL SHARP EDGES .015 x 45° OR .015R
CHECKED:	CLOUGH	2. DIMENSIONAL LIMITS APPLY AFTER PLATING
OPPS APPR:	ANDERSON	3. INTERPRET DIM AND TOL PER ASME Y14.5M-2009
QA APPR:	LINDSAY	USED ON MODEL
APPROVED:	GILBERT	AW139
SCALE 1:2	DATE 2/21/2013	SHEET 10 OF 47

This drawing, specifications, and concepts contained here in are the sole property of Dart Aerospace, and may not be reproduced or used in any fashion without the prior written permission of Dart Aerospace Eugene, OR.

REVISIONS

REV	ECR	DESCRIPTION	DATE	INITIAL	APPROVED
1		**-15** ADDED TOLERANCE WAS .945 IS .945±.03, WAS 5.950 IS 5.950±.03. CH'D TOLERANCE WAS 3.170 IS 3.17, WAS 2.580 IS 2.58.	7/1/2013	CFS	JAG
3	15-0017	**-15** CH'D WELD FROM 2-5 AND 1-3 TO SKIP WELD AS NECESSARY NOTE.	1/20/2015	RJC	JAG
5	16-0164	**-15** REMOVED FINISH SPEC; CH'D DIM WAS 1.250+.030/-.000 IS 1.28+.03/-.00, WAS 3.17 IS 3.16.	10/12/2016	SM	JAG
6	17-0031	**-15** DIMENSION ADDED 2X .33 NO WELD INSIDE; CH'D DIM WAS .945±.03 IS .945±.030, WAS 5.950±.03 IS 5.950±.030.	1/24/2017	SM	JAG

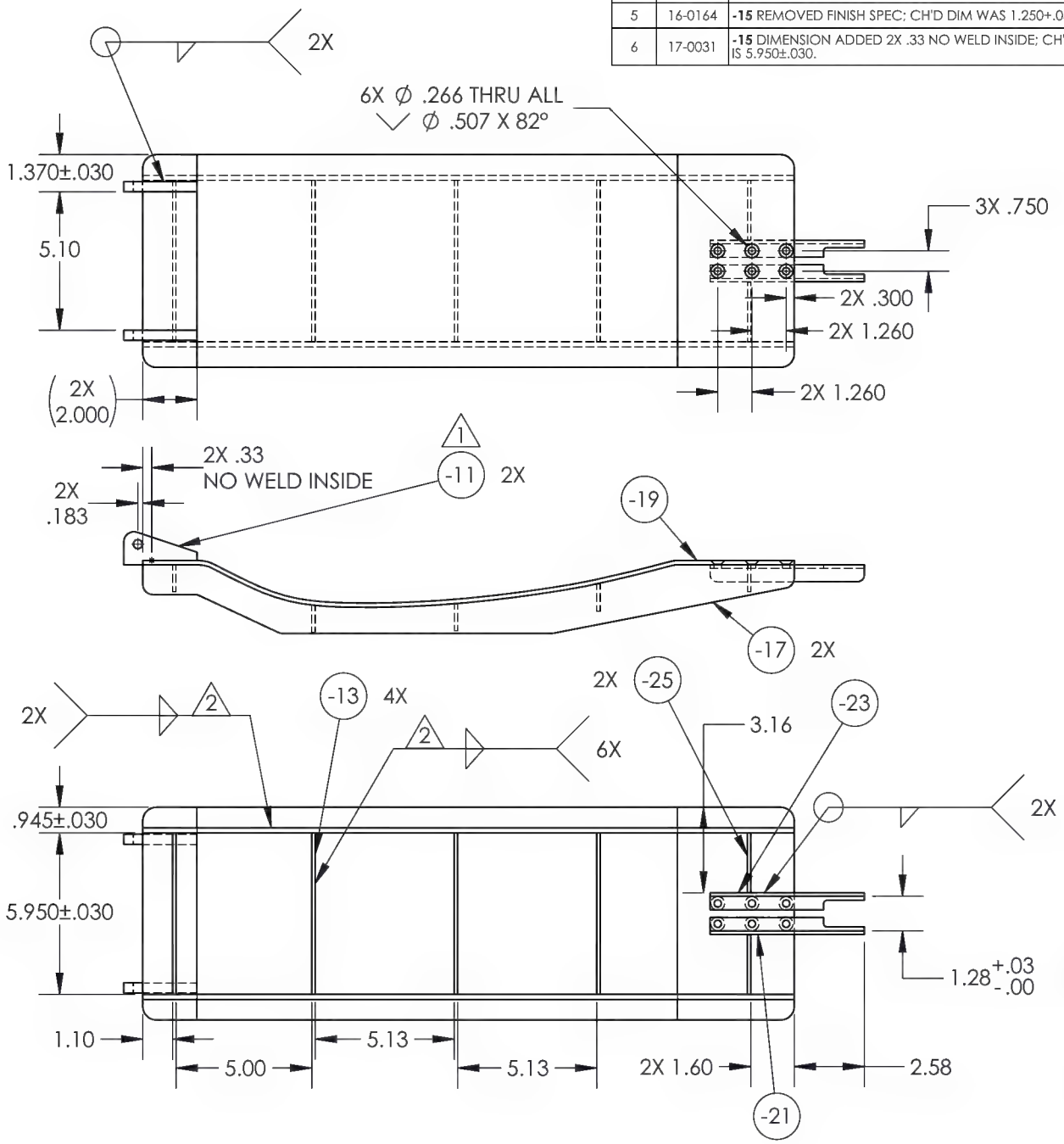

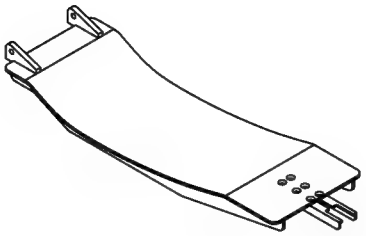

-15

UPPER JAW WELDMENT

NOTE:

1. USE WELD FIXTURE TO ALIGN TWO HINGE PLATES -11 TO PLATE -19.
2. SKIP WELD AS NECESSARY.

DART AEROSPACE

TITLE: TOOL, M/R BLADE LIFTING

DWG NO. RBW6205G00632-3G-15 REV 6

MAT'L	
HEAT TREAT	
FINISH	POWDER COAT RED
SPEC	
DRAWN BY:	GILBERT
CHECKED:	CLOUGH
OPPS APPR:	ANDERSON
QA APPR:	LINDSAY
APPROVED:	GILBERT

UNLESS OTHERWISE SPECIFIED
DIMENSIONS ARE IN INCHES
.XXX ± .010 FRACTIONS ± 1/8
.XX ± .03 ANGLES ±1°
.X ± .1 SURFACES = 125
1. BREAK ALL SHARP EDGES .015 x 45° OR .015R
2. DIMENSIONAL LIMITS APPLY AFTER PLATING
3. INTERPRET DIM AND TOL PER ASME Y14.5M-2009

USED ON MODEL: AW139

SCALE 1:6 | DATE 2/21/2013 | SHEET 11 OF 47

This drawing, specifications, and concepts contained here in are the sole property of Dart Aerospace, and may not be reproduced or used in any fashion without the prior written permission of Dart Aerospace Eugene, OR.

REVISIONS

REV	ECR	DESCRIPTION	DATE	INITIAL	APPROVED
4	15-0337	**-17** CH'D TO SHEET METAL TOLERANCE.	10/26/2015	RJC	JAG

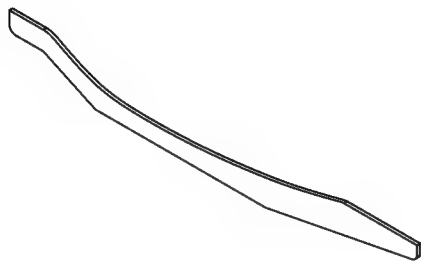

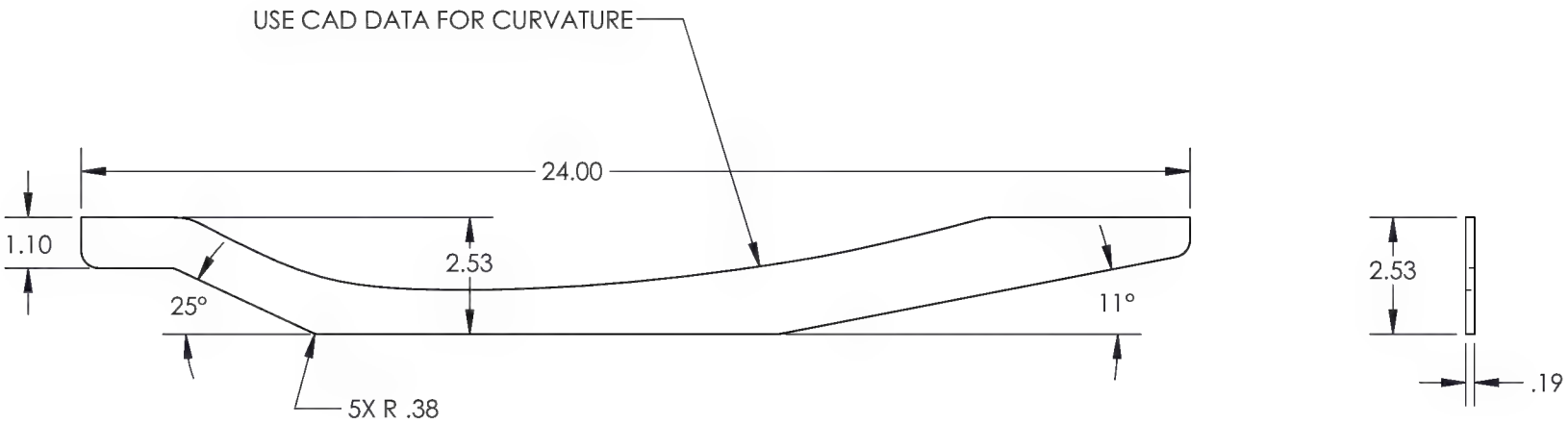

-17

UPPER JAW SIDE PLATE

DART AEROSPACE

TITLE
TOOL, M/R BLADE LIFTING

DWG NO. RBW6205G00632-3G-17 REV 6

MAT'L 6061
HEAT TREAT
FINISH SEE -15 WELDMENT
SPEC

DRAWN BY: GILBERT
CHECKED: CLOUGH
OPPS APPR: ANDERSON
QA APPR: LINDSAY
APPROVED: GILBERT

UNLESS OTHERWISE SPECIFIED
DIMENSIONS ARE IN INCHES
.XXX ± .010 FRACTIONS ± 1/8
.XX ± .03 ANGLES ±1°
.X ± .1 SURFACES = 125√
1. BREAK ALL SHARP EDGES .015 x 45° OR .015R
2. DIMENSIONAL LIMITS APPLY AFTER PLATING
3. INTERPRET DIM AND TOL PER ASME Y14.5M-2009

USED ON MODEL
AW139

SCALE 1:4 DATE 2/21/2013 SHEET 12 OF 47

This drawing, specifications, and concepts contained here in are the sole property of Dart Aerospace, and may not be reproduced or used in any fashion without the prior written permission of Dart Aerospace Eugene, OR.

REVISIONS

REV	ECR	DESCRIPTION	DATE	INITIAL	APPROVED

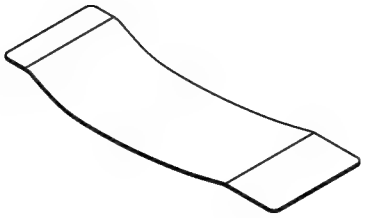

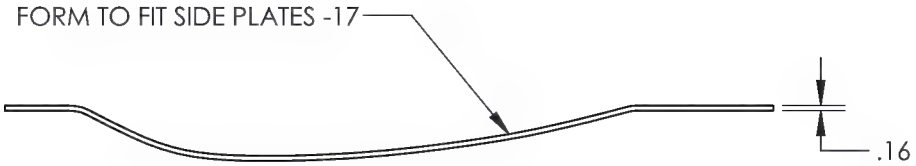

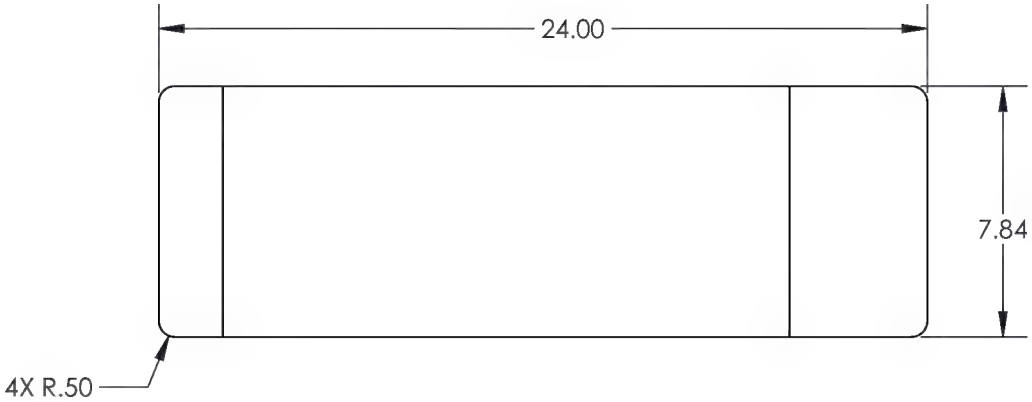

-19

UPPER JAW PLATE

DART AEROSPACE

TITLE: TOOL, M/R BLADE LIFTING

DWG NO. RBW6205G00632-3G-19 REV 6

MAT'L	5052
HEAT TREAT	
FINISH	SEE -15 WELDMENT
SPEC	
DRAWN BY:	GILBERT
CHECKED:	CLOUGH
OPPS APPR:	ANDERSON
QA APPR:	LINDSAY
APPROVED:	GILBERT

UNLESS OTHERWISE SPECIFIED
DIMENSIONS ARE IN INCHES
.XXX ± .010 FRACTIONS ± 1/8
.XX ± .03 ANGLES ±1°
.X ± .1 SURFACES = 125
1. BREAK ALL SHARP EDGES .015 x 45° OR .015R
2. DIMENSIONAL LIMITS APPLY AFTER PLATING
3. INTERPRET DIM AND TOL PER ASME Y14.5M-2009

USED ON MODEL: AW139

SCALE 1:6 | DATE 2/21/2013 | SHEET 13 OF 47

This drawing, specifications, and concepts contained here in are the sole property of Dart Aerospace, and may not be reproduced or used in any fashion without the prior written permission of Dart Aerospace Eugene, OR.

REVISIONS

REV	ECR	DESCRIPTION	DATE	INITIAL	APPROVED
3	15-0017	**-21** CH'D MATERIAL WAS 6061 IS 6063.	1/20/2015	RJC	JAG
4	15-0337	**-21** CH'D TO SHEET METAL TOLERANCE.	10/26/2015	RJC	JAG

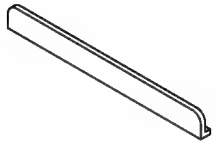

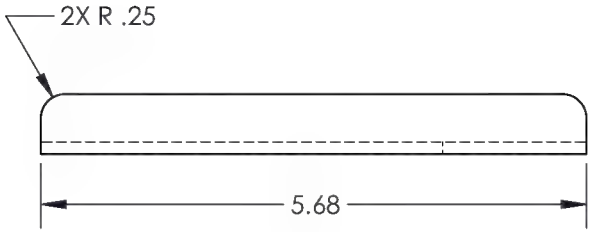

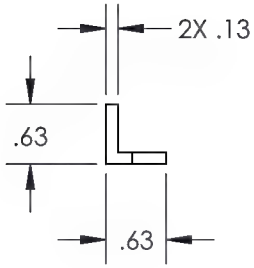

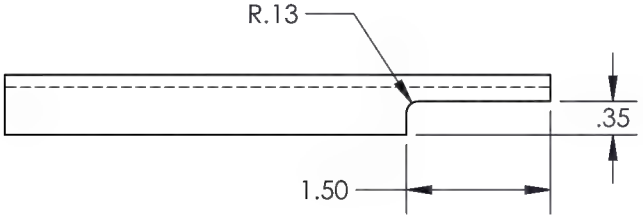

-21

ANGLE BRACE

DART AEROSPACE

TITLE
TOOL, M/R BLADE LIFTING

DWG NO. RBW6205G00632-3G-21 REV 6

MAT'L 6063		UNLESS OTHERWISE SPECIFIED DIMENSIONS ARE IN INCHES .XXX ± .010 FRACTIONS ± 1/8 .XX ± .03 ANGLES ±1° .X ± .1 SURFACES = 125√ 1. BREAK ALL SHARP EDGES .015 x 45° OR .015R 2. DIMENSIONAL LIMITS APPLY AFTER PLATING 3. INTERPRET DIM AND TOL PER ASME Y14.5M-2009
HEAT TREAT		
FINISH SEE -15 WELDMENT		
SPEC		
DRAWN BY:	GILBERT	
CHECKED:	CLOUGH	
OPPS APPR:	ANDERSON	
QA APPR:	LINDSAY	USED ON MODEL
APPROVED:	GILBERT	AW139
SCALE 1:2	DATE 2/21/2013	SHEET 14 OF 47

This drawing, specifications, and concepts contained here in are the sole property of Dart Aerospace, and may not be reproduced or used in any fashion without the prior written permission of Dart Aerospace Eugene, OR.

REVISIONS

REV	ECR	DESCRIPTION	DATE	INITIAL	APPROVED
3	15-0017	**-23** CH'D MATERIAL WAS 6061 IS 6063.	1/20/2015	RJC	JAG
4	15-0337	**-23** CH'D TO SHEET METAL TOLERANCE.	10/26/2015	RJC	JAG

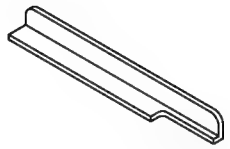

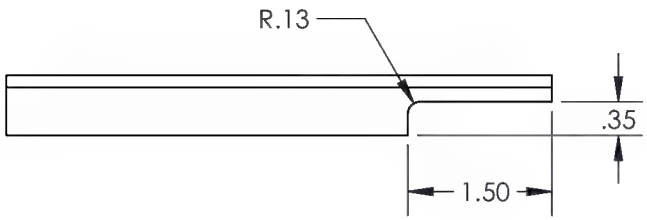

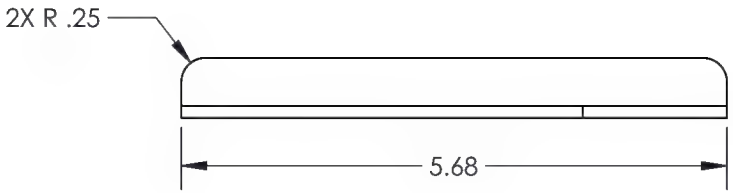

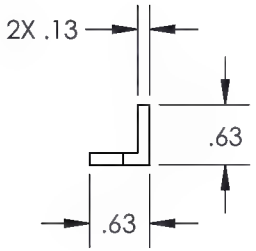

-23

ANGLE BRACE 2

DART AEROSPACE

TITLE
TOOL, M/R BLADE LIFTING

DWG NO. RBW6205G00632-3G-23 REV 6

MAT'L 6063
HEAT TREAT
FINISH SEE -15 WELDMENT
SPEC

DRAWN BY: GILBERT
CHECKED: CLOUGH
OPPS APPR: ANDERSON
QA APPR: LINDSAY
APPROVED: GILBERT

UNLESS OTHERWISE SPECIFIED
DIMENSIONS ARE IN INCHES
.XXX ± .010 FRACTIONS ± 1/8
.XX ± .03 ANGLES ±1°
.X ± .1 SURFACES = 125√
1. BREAK ALL SHARP EDGES .015 x 45° OR .015R
2. DIMENSIONAL LIMITS APPLY AFTER PLATING
3. INTERPRET DIM AND TOL PER ASME Y14.5M-2009

USED ON MODEL
AW139

SCALE 1:2 DATE 2/26/2013 SHEET 15 OF 47

This drawing, specifications, and concepts contained here in are the sole property of Dart Aerospace, and may not be reproduced or used in any fashion without the prior written permission of Dart Aerospace Eugene, OR.

REVISIONS

REV	ECR	DESCRIPTION	DATE	INITIAL	APPROVED
4	15-0337	**-25** CH'D TO SHEET METAL TOLERANCE.	10/26/2015	RJC	JAG

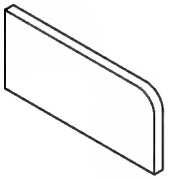

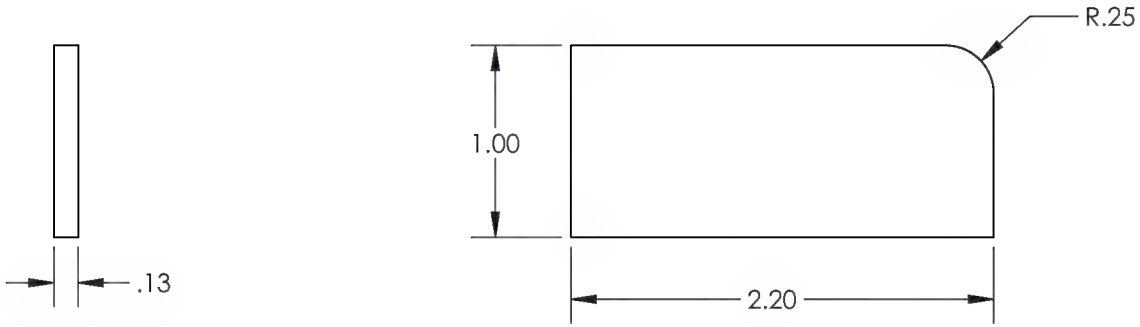

-25

UPPER JAW BRACE, SHORT

DART AEROSPACE

TITLE
TOOL, M/R BLADE LIFTING

DWG NO. RBW6205G00632-3G-25 REV 6

MAT'L 6061
HEAT TREAT
FINISH SEE -15 WELDMENT
SPEC

UNLESS OTHERWISE SPECIFIED
DIMENSIONS ARE IN INCHES
.XXX ± .010 FRACTIONS ± 1/8
.XX ± .03 ANGLES ±1°
.X ± .1 SURFACES = 125√
1. BREAK ALL SHARP EDGES .015 x 45° OR .015R
2. DIMENSIONAL LIMITS APPLY AFTER PLATING
3. INTERPRET DIM AND TOL PER ASME Y14.5M-2009

DRAWN BY:	GILBERT
CHECKED:	CLOUGH
OPPS APPR:	ANDERSON
QA APPR:	LINDSAY
APPROVED:	GILBERT

USED ON MODEL
AW139

SCALE 1:1 DATE 2/21/2013 SHEET 16 OF 47

This drawing, specifications, and concepts contained here in are the sole property of Dart Aerospace, and may not be reproduced or used in any fashion without the prior written permission of Dart Aerospace Eugene, OR.

REVISIONS

REV	ECR	DESCRIPTION	DATE	INITIAL	APPROVED
5	16-0164	**-27** REMOVED FINISH SPEC.	10/12/2016	SM	JAG

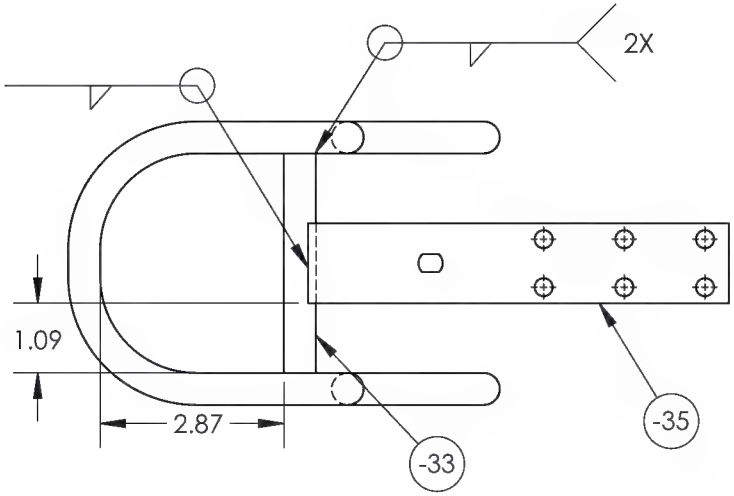

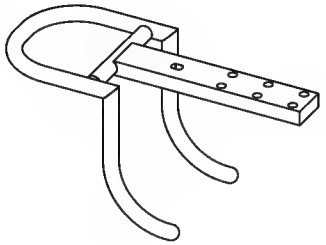

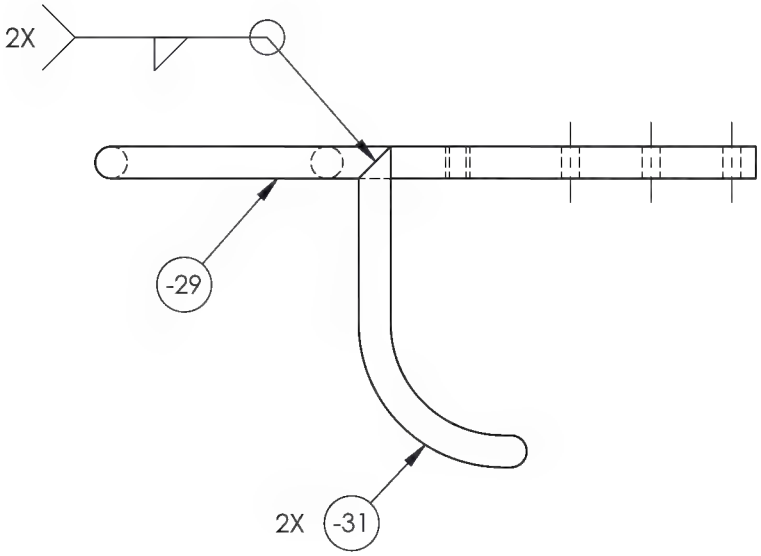

-27

HANDLE WELDMENT

DART AEROSPACE

TITLE
TOOL, M/R BLADE LIFTING

DWG NO. RBW6205G00632-3G-27 REV 6

MAT'L	
HEAT TREAT	
FINISH	POWDER COAT RED
SPEC	
DRAWN BY:	CLOUGH
CHECKED:	CLOUGH
OPPS APPR:	ANDERSON
QA APPR:	LINDSAY
APPROVED:	GILBERT

UNLESS OTHERWISE SPECIFIED
DIMENSIONS ARE IN INCHES
.XXX ± .010 FRACTIONS ± 1/8
.XX ± .03 ANGLES ±1°
.X ± .1 SURFACES = 125√
1. BREAK ALL SHARP EDGES .015 x 45° OR .015R
2. DIMENSIONAL LIMITS APPLY AFTER PLATING
3. INTERPRET DIM AND TOL PER ASME Y14.5M-2009

USED ON MODEL
AW 139

SCALE 1:3 | DATE 2/12/2013 | SHEET 17 OF 47

This drawing, specifications, and concepts contained here in are the sole property of Dart Aerospace, and may not be reproduced or used in any fashion without the prior written permission of Dart Aerospace Eugene, OR.

REVISIONS

REV	ECR	DESCRIPTION	DATE	INITIAL	APPROVED
4	15-0337	**-29** CH'D TO SHEET METAL TOLERANCE.	10/26/2015	RJC	JAG
5	16-0164	**-29** CH'D DIM WAS R1.00 IS R1.50.	10/12/2016	SM	JAG
6	17-0031	**-29** CH'D DIM WAS R1.50 IS 2X R1.50.	1/24/2017	SM	JAG

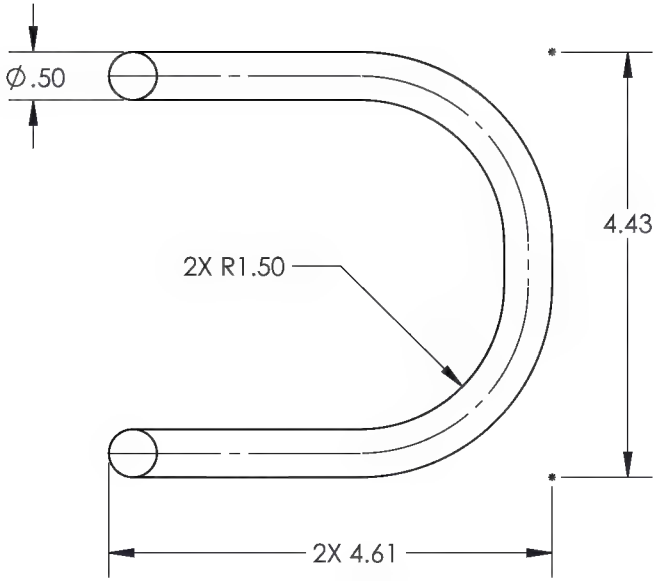

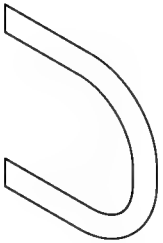

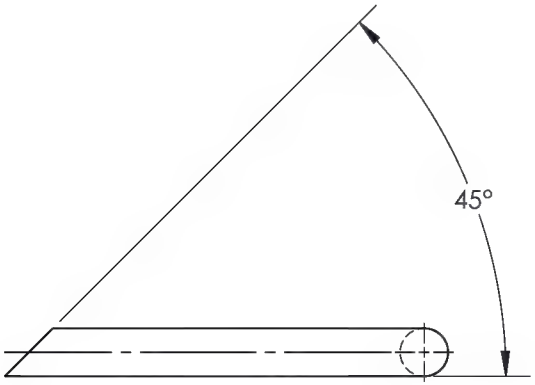

-29

HANDLE

DART AEROSPACE

TITLE TOOL, M/R BLADE LIFTING

DWG NO. RBW6205G00632-3G-29 REV 6

MAT'L 6063

HEAT TREAT

FINISH SEE -27 WELDMENT

SPEC

DRAWN BY: CLOUGH

CHECKED: CLOUGH

OPPS APPR: ANDERSON

QA APPR: LINDSAY

APPROVED: GILBERT

UNLESS OTHERWISE SPECIFIED
DIMENSIONS ARE IN INCHES
.XXX ± .010 FRACTIONS ± 1/8
.XX ± .03 ANGLES ±1°
.X ± .1 SURFACES = 125√

1. BREAK ALL SHARP EDGES .015 x 45° OR .015R
2. DIMENSIONAL LIMITS APPLY AFTER PLATING
3. INTERPRET DIM AND TOL PER ASME Y14.5M-2009

USED ON MODEL

AW 139

SCALE 1:2 DATE 2/12/2013 SHEET 18 OF 47

This drawing, specifications, and concepts contained here in are the sole property of Dart Aerospace, and may not be reproduced or used in any fashion without the prior written permission of Dart Aerospace Eugene, OR.

REVISIONS

REV	ECR	DESCRIPTION	DATE	INITIAL	APPROVED
4	15-0337	**-31** CH'D TO SHEET METAL TOLERANCE.	10/26/2015	RJC	JAG
6	17-0031	**-31** CH'D DIM WAS R.25 IS SR.25.	1/24/2017	SM	JAG

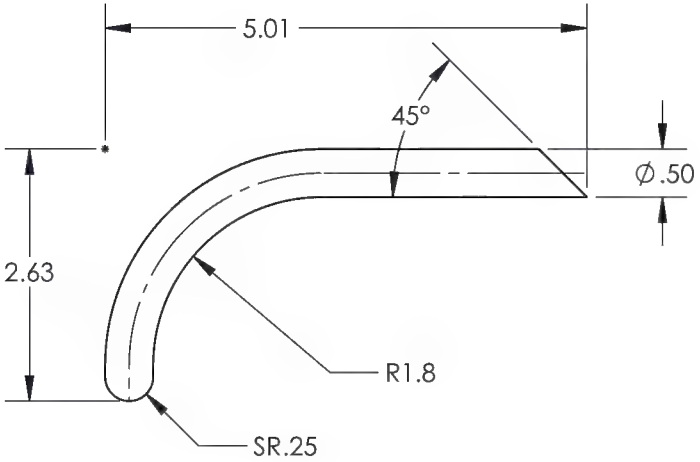

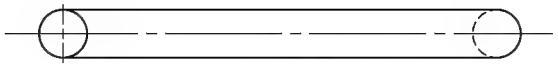

-31

HANDLE ARM

DART AEROSPACE

TITLE
TOOL, M/R BLADE LIFTING

DWG NO. RBW6205G00632-3G-31 REV 6

MAT'L 6063		UNLESS OTHERWISE SPECIFIED DIMENSIONS ARE IN INCHES
HEAT TREAT		.XXX ± .010 FRACTIONS ± 1/8
FINISH SEE -27 WELDMENT		.XX ± .03 ANGLES ±1°
SPEC		.X ± .1 SURFACES = 125√
DRAWN BY:	CLOUGH	1. BREAK ALL SHARP EDGES .015 x 45° OR .015R
CHECKED:	CLOUGH	2. DIMENSIONAL LIMITS APPLY AFTER PLATING
OPPS APPR:	ANDERSON	3. INTERPRET DIM AND TOL PER ASME Y14.5M-2009
QA APPR:	LINDSAY	USED ON MODEL
APPROVED:	GILBERT	AW 139
SCALE 1:2	DATE 2/12/2013	SHEET 19 OF 47

This drawing, specifications, and concepts contained here in are the sole property of Dart Aerospace, and may not be reproduced or used in any fashion without the prior written permission of Dart Aerospace Eugene, OR.

REVISIONS

REV	ECR	DESCRIPTION	DATE	INITIAL	APPROVED
4	15-0337	**-33** CH'D TO SHEET METAL TOLERANCE.	10/26/2015	RJC	JAG

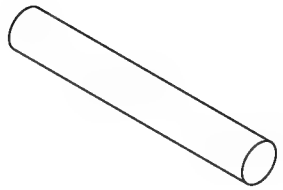

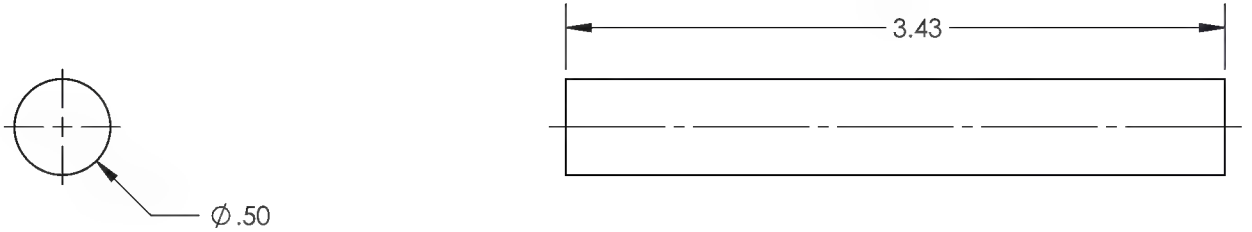

-33

HANDLE BRACE

DART AEROSPACE

TITLE
TOOL, M/R BLADE LIFTING

DWG NO. RBW6205G00632-3G-33 REV 6

MAT'L	6063
HEAT TREAT	
FINISH	SEE -27 WELDMENT
SPEC	
DRAWN BY:	CLOUGH
CHECKED:	CLOUGH
OPPS APPR:	ANDERSON
QA APPR:	LINDSAY
APPROVED:	GILBERT

UNLESS OTHERWISE SPECIFIED
DIMENSIONS ARE IN INCHES
.XXX ± .010 FRACTIONS ± 1/8
.XX ± .03 ANGLES ±1°
.X ± .1 SURFACES = 125√

1. BREAK ALL SHARP EDGES .015 x 45° OR .015R
2. DIMENSIONAL LIMITS APPLY AFTER PLATING
3. INTERPRET DIM AND TOL PER ASME Y14.5M-2009

USED ON MODEL
AW139

SCALE 1:1 | DATE 2/12/2013 | SHEET 20 OF 47

This drawing, specifications, and concepts contained here in are the sole property of Dart Aerospace, and may not be reproduced or used in any fashion without the prior written permission of Dart Aerospace Eugene, OR.

REVISIONS

REV	ECR	DESCRIPTION	DATE	INITIAL	APPROVED

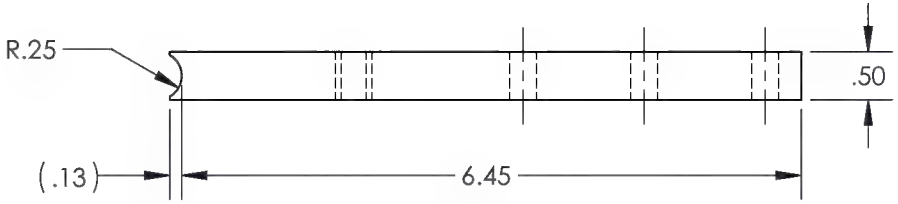

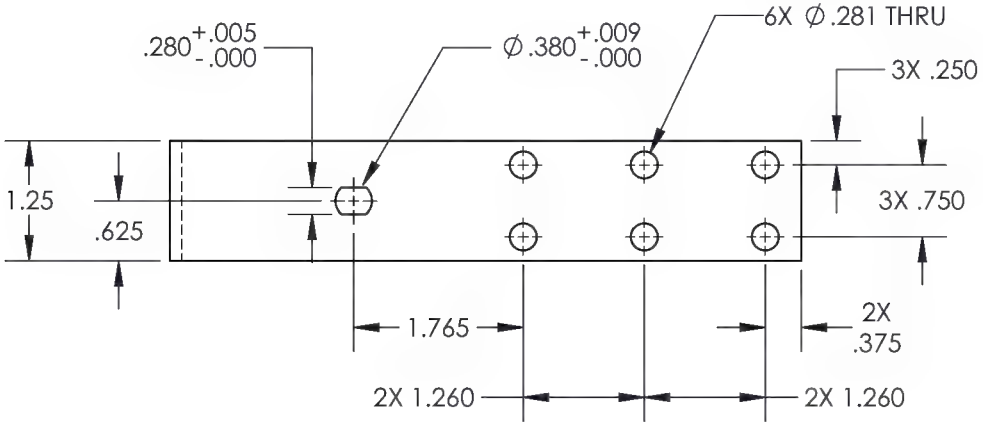

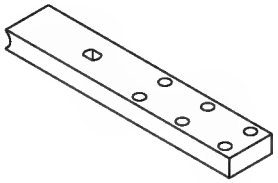

-35

LATCH BLOCK

DART AEROSPACE

TITLE: TOOL, M/R BLADE LIFTING

DWG NO. RBW6205G00632-3G-35 REV 6

MAT'L 6061
HEAT TREAT
FINISH SEE -27 WELDMENT
SPEC

DRAWN BY: GILBERT
CHECKED: CLOUGH
OPPS APPR: ANDERSON
QA APPR: LINDSAY
APPROVED: GILBERT

UNLESS OTHERWISE SPECIFIED
DIMENSIONS ARE IN INCHES
.XXX ± .005 FRACTIONS ± 1/8
.XX ± .01 ANGLES ±.5°
.X ± .1 SURFACES = 125√
1. BREAK ALL SHARP EDGES .015 x 45° OR .015R
2. DIMENSIONAL LIMITS APPLY AFTER PLATING
3. INTERPRET DIM AND TOL PER ASME Y14.5M-2009

USED ON MODEL: AW139

SCALE 1:2 | DATE 2/21/2013 | SHEET 21 OF 47

This drawing, specifications, and concepts contained here in are the sole property of Dart Aerospace, and may not be reproduced or used in any fashion without the prior written permission of Dart Aerospace Eugene, OR.

REVISIONS

REV	ECR	DESCRIPTION	DATE	INITIAL	APPROVED
4	15-0337	**-37** CH'D TO SHEET METAL TOLERANCE.	10/26/2015	RJC	JAG

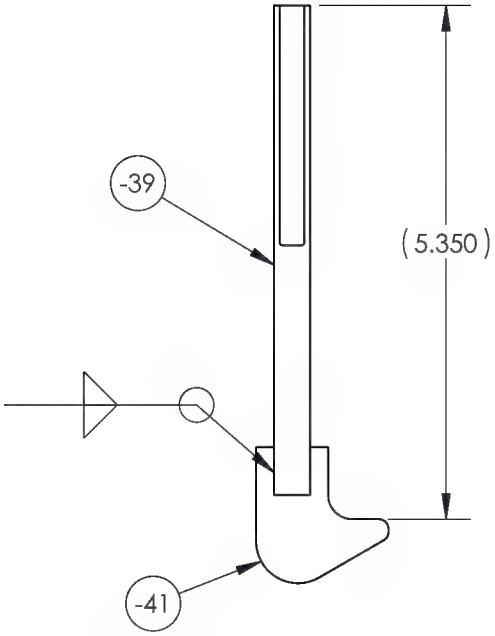

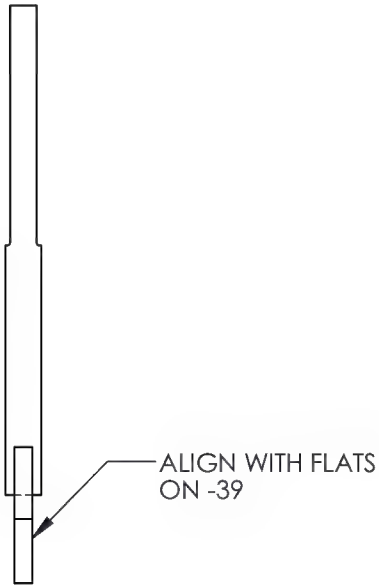

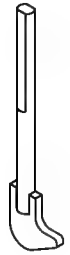

-37

HOOK WELDMENT

DART AEROSPACE

TITLE: TOOL, M/R BLADE LIFTING

DWG NO. RBW6205G00632-3G-37 REV 6

MAT'L
HEAT TREAT
FINISH
SPEC

UNLESS OTHERWISE SPECIFIED
DIMENSIONS ARE IN INCHES
.XXX ± .010 FRACTIONS ± 1/8
.XX ± .03 ANGLES ±1°
.X ± .1 SURFACES = 125√
1. BREAK ALL SHARP EDGES .015 x 45° OR .015R
2. DIMENSIONAL LIMITS APPLY AFTER PLATING
3. INTERPRET DIM AND TOL PER ASME Y14.5M-2009

DRAWN BY:	GILBERT
CHECKED:	CLOUGH
OPPS APPR:	ANDERSON
QA APPR:	LINDSAY
APPROVED:	GILBERT

USED ON MODEL: AW139

SCALE 1:2 | DATE 2/26/2013 | SHEET 22 OF 47

This drawing, specifications, and concepts contained here in are the sole property of Dart Aerospace, and may not be reproduced or used in any fashion without the prior written permission of Dart Aerospace Eugene, OR.

REVISIONS

REV	ECR	DESCRIPTION	DATE	INITIAL	APPROVED
1		**-39** CH'D THREAD WAS 3/8-24 IS 3/8-16.	7/1/2013	CFS	JAG
3	15-0017	**-39** ADDED MISSING DIMENSION 2X R.03.	1/20/2014	RJC	JAG
4	15-0337	**-39** CH'D TO SHEET METAL TOLERANCE.	10/26/2015	RJC	JAG

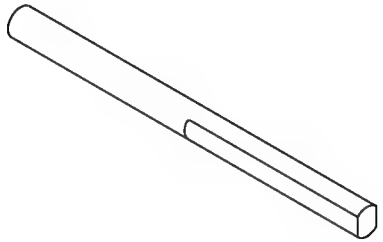

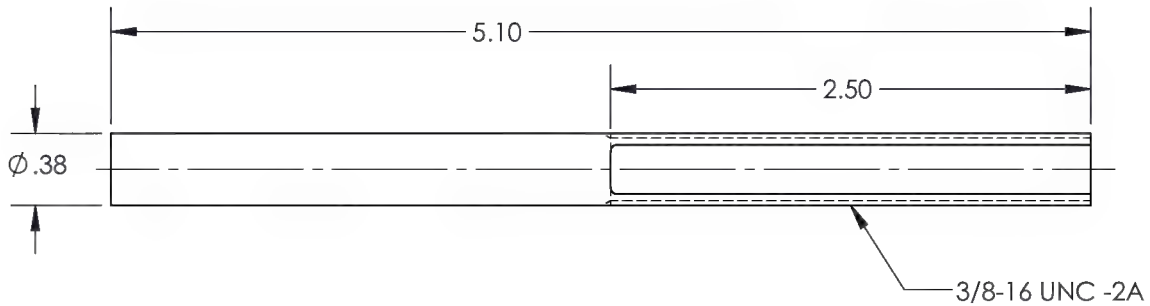

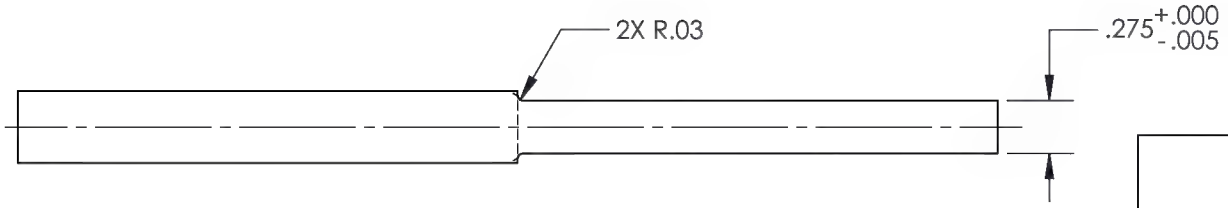

-39

ROD

DART AEROSPACE

TITLE
TOOL, M/R BLADE LIFTING

DWG NO. RBW6205G00632-3G-39 REV 6

MAT'L 304 S.S.
HEAT TREAT
FINISH
SPEC

UNLESS OTHERWISE SPECIFIED
DIMENSIONS ARE IN INCHES
.XXX ± .010 FRACTIONS ± 1/8
.XX ± .03 ANGLES ±1°
.X ± .1 SURFACES = 125
1. BREAK ALL SHARP EDGES .015 x 45° OR .015R
2. DIMENSIONAL LIMITS APPLY AFTER PLATING
3. INTERPRET DIM AND TOL PER ASME Y14.5M-2009

DRAWN BY:	GILBERT
CHECKED:	CLOUGH
OPPS APPR:	ANDERSON
QA APPR:	LINDSAY
APPROVED:	GILBERT

USED ON MODEL
AW139

SCALE 1:1 DATE 2/26/2013 SHEET 23 OF 47

This drawing, specifications, and concepts contained here in are the sole property of Dart Aerospace, and may not be reproduced or used in any fashion without the prior written permission of Dart Aerospace Eugene, OR.

REVISIONS

REV	ECR	DESCRIPTION	DATE	INITIAL	APPROVED
4	15-0337	**-41** CH'D TO SHEET METAL TOLERANCE.	10/26/2015	RJC	JAG

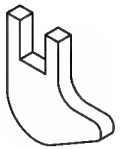

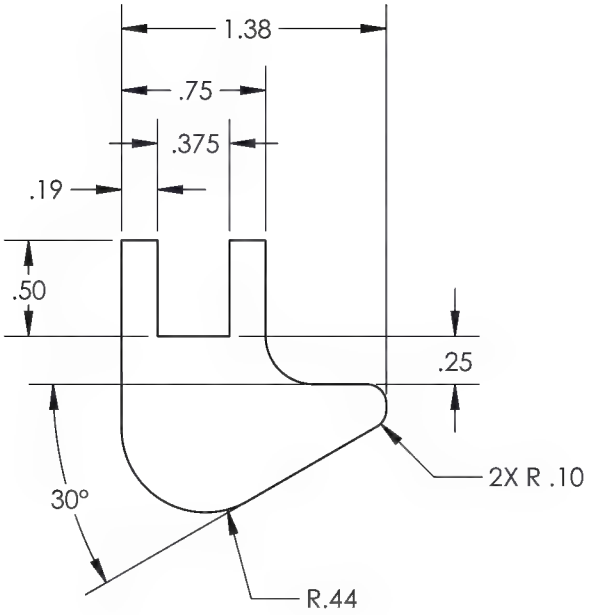

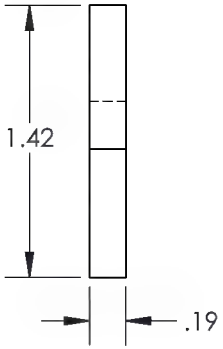

-41

HOOK

DART AEROSPACE

TITLE
TOOL, M/R BLADE LIFTING

DWG NO. RBW6205G00632-3G-41 REV 6

MAT'L 304 S.S.
HEAT TREAT
FINISH
SPEC

UNLESS OTHERWISE SPECIFIED
DIMENSIONS ARE IN INCHES
.XXX ± .010 FRACTIONS ± 1/8
.XX ± .03 ANGLES ±1°
.X ± .1 SURFACES = 125√
1. BREAK ALL SHARP EDGES .015 x 45° OR .015R
2. DIMENSIONAL LIMITS APPLY AFTER PLATING
3. INTERPRET DIM AND TOL PER ASME Y14.5M-2009

DRAWN BY:	GILBERT
CHECKED:	CLOUGH
OPPS APPR:	ANDERSON
QA APPR:	LINDSAY
APPROVED:	GILBERT

USED ON MODEL
AW139

SCALE 1:1 DATE 2/26/2013 SHEET 24 OF 47

This drawing, specifications, and concepts contained here in are the sole property of Dart Aerospace, and may not be reproduced or used in any fashion without the prior written permission of Dart Aerospace Eugene, OR.

REVISIONS

REV	ECR	DESCRIPTION	DATE	INITIAL	APPROVED
4	15-0337	**-43** CH'D TO SHEET METAL TOLERANCE.	10/26/2015	RJC	JAG
5	16-0164	**-43** REMOVED FINISH SPEC.	10/12/2016	SM	JAG

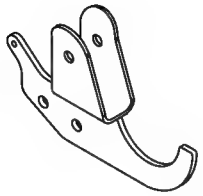

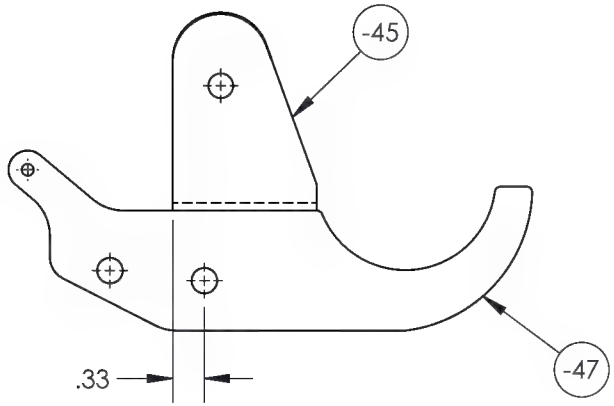

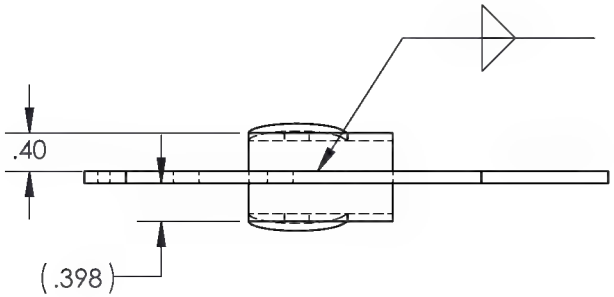

-43

LATCH WELDMENT

DART AEROSPACE

TITLE: TOOL, M/R BLADE LIFTING

DWG NO. RBW6205G00632-3G-43 REV 6

MAT'L	
HEAT TREAT	
FINISH	POWDER COAT RED
SPEC	
DRAWN BY:	CLOUGH
CHECKED:	CLOUGH
OPPS APPR:	ANDERSON
QA APPR:	LINDSAY
APPROVED:	GILBERT

UNLESS OTHERWISE SPECIFIED
DIMENSIONS ARE IN INCHES
.XXX ± .010 FRACTIONS ± 1/8
.XX ± .03 ANGLES ±1°
.X ± .1 SURFACES = 125√
1. BREAK ALL SHARP EDGES .015 x 45° OR .015R
2. DIMENSIONAL LIMITS APPLY AFTER PLATING
3. INTERPRET DIM AND TOL PER ASME Y14.5M-2009

USED ON MODEL: AW139

SCALE 1:2 | DATE 2/12/2013 | SHEET 25 OF 47

This drawing, specifications, and concepts contained here in are the sole property of Dart Aerospace, and may not be reproduced or used in any fashion without the prior written permission of Dart Aerospace Eugene, OR.

REVISIONS

REV	ECR	DESCRIPTION	DATE	INITIAL	APPROVED
1		**-45** ADDDED TOLERANCE WAS .76 IS .76 +.03-.00.	7/10/2013	RJC	JAG
2		**-45** ADDED AUX VIEW A-A & MISSING DIMS 2X R.50, 20°.	4/24/2014	DPD	RJC

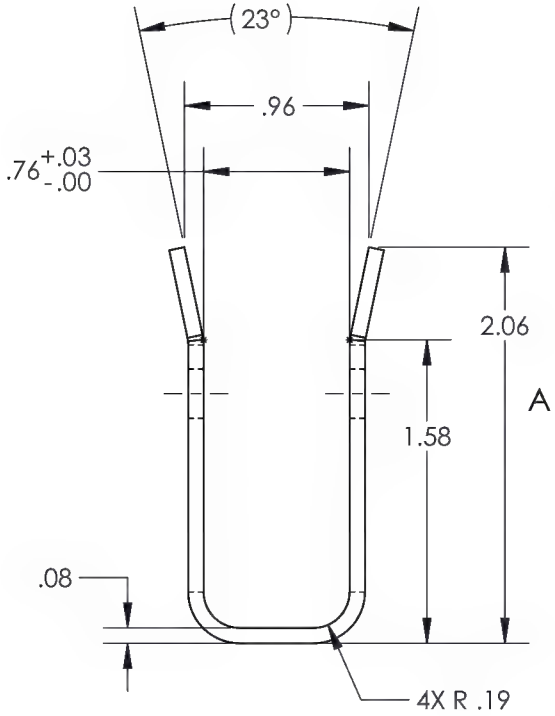

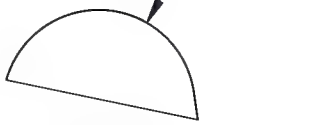

VIEW A-A

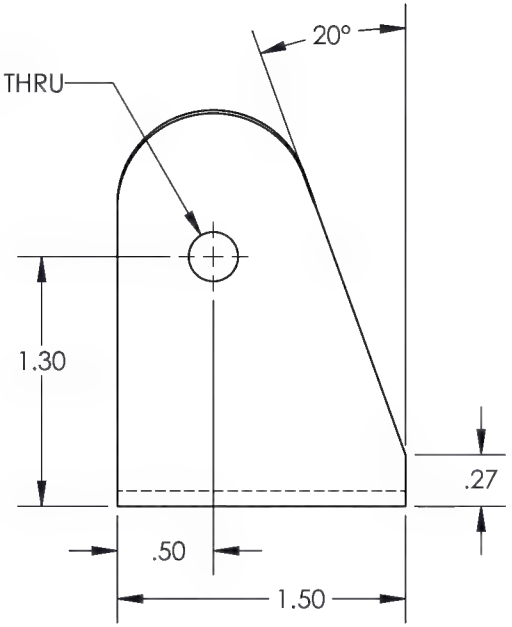

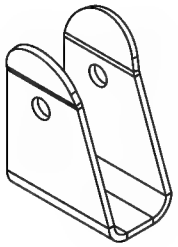

-45

LATCH CATCH

DART AEROSPACE

TITLE
TOOL, M/R BLADE LIFTING

DWG NO. RBW6205G00632-3G-45 REV 6

MAT'L	5052
HEAT TREAT	
FINISH	SEE -43 WELDMENT
SPEC	
DRAWN BY:	CLOUGH
CHECKED:	CLOUGH
OPPS APPR:	ANDERSON
QA APPR:	LINDSAY
APPROVED:	GILBERT

UNLESS OTHERWISE SPECIFIED
DIMENSIONS ARE IN INCHES
.XXX ± .010 FRACTIONS ± 1/8
.XX ± .03 ANGLES ±1°
.X ± .1 SURFACES = 125√

1. BREAK ALL SHARP EDGES .015 x 45° OR .015R
2. DIMENSIONAL LIMITS APPLY AFTER PLATING
3. INTERPRET DIM AND TOL PER ASME Y14.5M-2009

USED ON MODEL
AW 139

SCALE 1:1 DATE 2/12/2013 SHEET 26 OF 47

This drawing, specifications, and concepts contained here in are the sole property of Dart Aerospace, and may not be reproduced or used in any fashion without the prior written permission of Dart Aerospace Eugene, OR.

REVISIONS

REV	ECR	DESCRIPTION	DATE	INITIAL	APPROVED
4	15-0337	**-47** CH'D TO SHEET METAL TOLERANCE.	10/26/2015	RJC	JAG

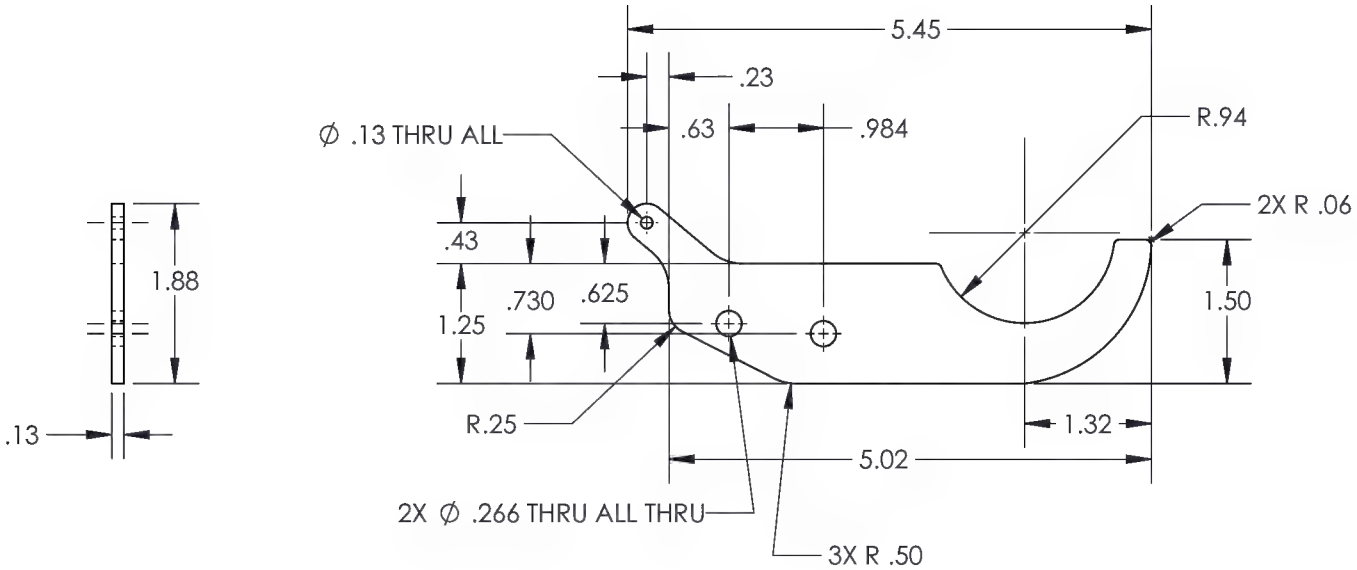

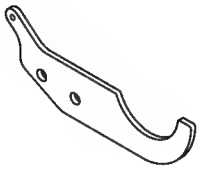

-47

LATCH HOOK

DART AEROSPACE

TITLE
TOOL, M/R BLADE LIFTING

DWG NO. RBW6205G00632-3G-47 REV 6

MAT'L 6061
HEAT TREAT
FINISH SEE -43 WELDMENT
SPEC

UNLESS OTHERWISE SPECIFIED
DIMENSIONS ARE IN INCHES
.XXX ± .010 FRACTIONS ± 1/8
.XX ± .03 ANGLES ±1°
.X ± .1 SURFACES = 125√
1. BREAK ALL SHARP EDGES .015 x 45° OR .015R
2. DIMENSIONAL LIMITS APPLY AFTER PLATING
3. INTERPRET DIM AND TOL PER ASME Y14.5M-2009

DRAWN BY:	CLOUGH
CHECKED:	CLOUGH
OPPS APPR:	ANDERSON
QA APPR:	LINDSAY
APPROVED:	GILBERT

USED ON MODEL
AW 139

SCALE 1:2 DATE 2/12/2013 SHEET 27 OF 47

This drawing, specifications, and concepts contained here in are the sole property of Dart Aerospace, and may not be reproduced or used in any fashion without the prior written permission of Dart Aerospace Eugene, OR.

REVISIONS

REV	ECR	DESCRIPTION	DATE	INITIAL	APPROVED
4	15-0337	**-49** CH'D TO SHEET METAL TOLERANCE.	10/26/2015	RJC	JAG
5	16-0164	**-49** REMOVED FINISH SPEC.	10/12/2016	SM	JAG

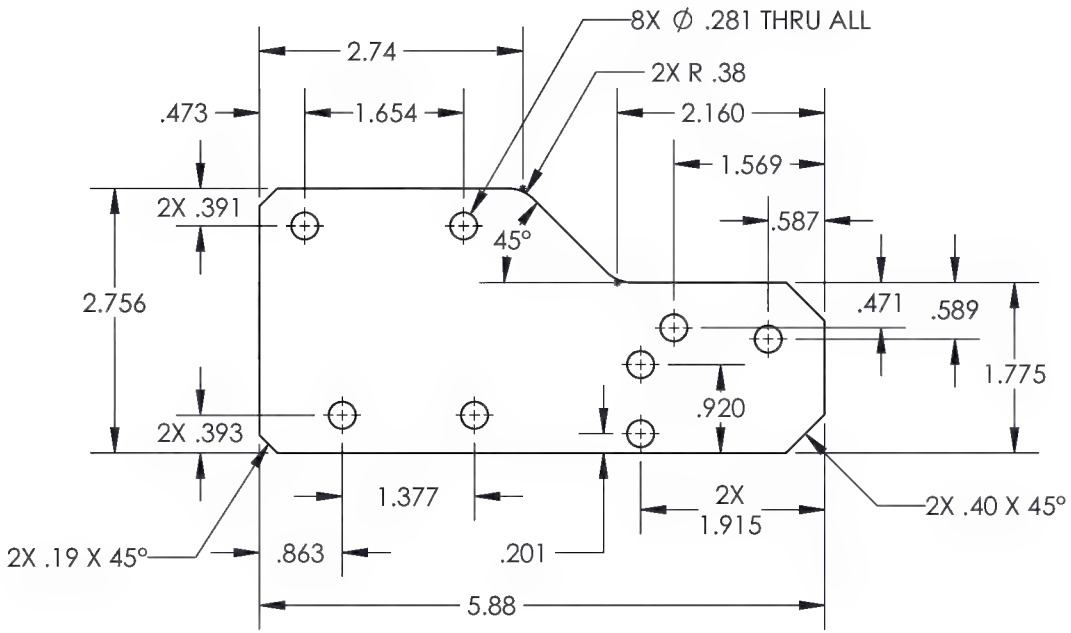

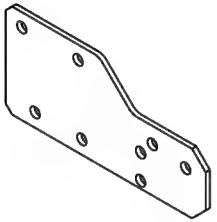

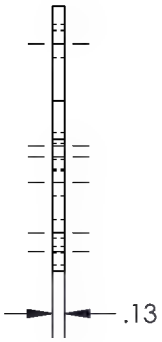

-49

LATCH BRACKET

DART AEROSPACE

TITLE
TOOL, M/R BLADE LIFTING

DWG NO. RBW6205G00632-3G-49 REV 6

MAT'L 6061		UNLESS OTHERWISE SPECIFIED DIMENSIONS ARE IN INCHES .XXX ± .010 FRACTIONS ± 1/8 .XX ± .03 ANGLES ±1° .X ± .1 SURFACES = 125√
HEAT TREAT		1. BREAK ALL SHARP EDGES .015 x 45° OR .015R
FINISH POWDER COAT RED		2. DIMENSIONAL LIMITS APPLY AFTER PLATING
SPEC		3. INTERPRET DIM AND TOL PER ASME Y14.5M-2009
DRAWN BY:	GILBERT	
CHECKED:	CLOUGH	
OPPS APPR:	ANDERSON	
QA APPR:	LINDSAY	USED ON MODEL
APPROVED:	GILBERT	AW139
SCALE 1:2	DATE 2/26/2013	SHEET 28 OF 47

This drawing, specifications, and concepts contained here in are the sole property of Dart Aerospace, and may not be reproduced or used in any fashion without the prior written permission of Dart Aerospace Eugene, OR.

REVISIONS

REV	ECR	DESCRIPTION	DATE	INITIAL	APPROVED
2		**-50** ADDED WELDMENT.	4/28/2014	DPD	GE
5	16-0164	**-50** REMOVED FINISH SPEC, CH'D SHEET TOL WAS ±.005/±.01/±.1 IS ±.010/±.03/±.1.	10/12/2016	SM	JAG

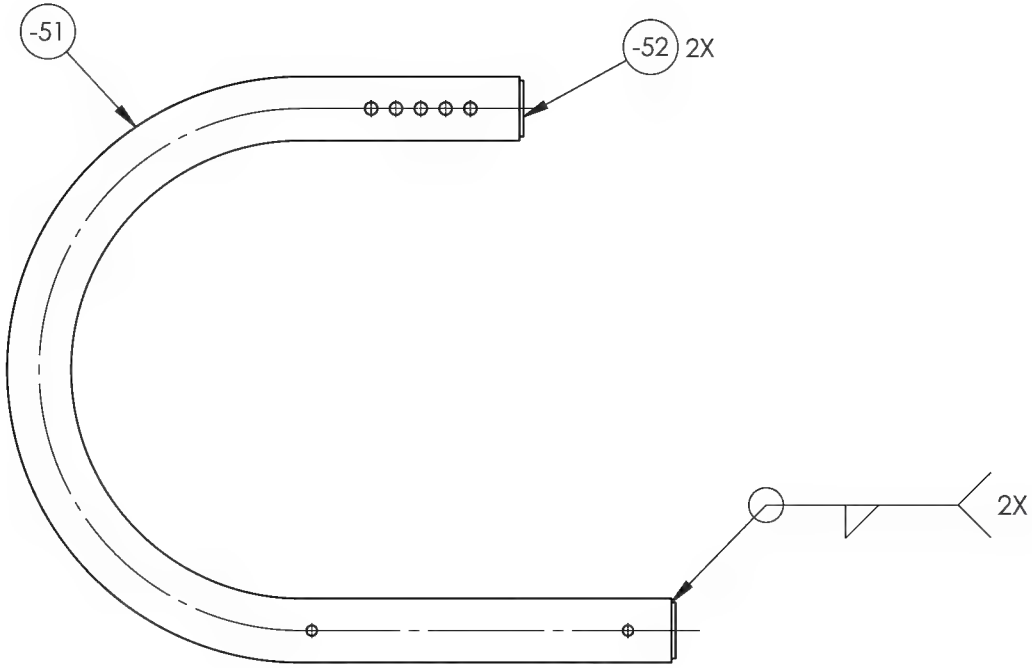

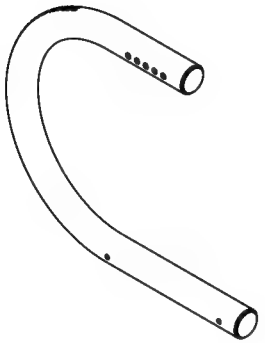

-50

LIFT ARM WELDMENT

DART AEROSPACE

TITLE
TOOL, M/R BLADE LIFTING

DWG NO. RBW6205G00632-3G-50 REV 6

MAT'L
HEAT TREAT
FINISH POWDER COAT RED
SPEC

DRAWN BY: GILBERT
CHECKED: CLOUGH
OPPS APPR: ANDERSON
QA APPR: LINDSAY
APPROVED: GILBERT

UNLESS OTHERWISE SPECIFIED
DIMENSIONS ARE IN INCHES
.XXX ± .010 FRACTIONS ± 1/8
.XX ± .03 ANGLES ±1°
.X ± .1 SURFACES = 125√
1. BREAK ALL SHARP EDGES .015 x 45° OR .015R
2. DIMENSIONAL LIMITS APPLY AFTER PLATING
3. INTERPRET DIM AND TOL PER ASME Y14.5M-2009

USED ON MODEL
AW139

SCALE 1:6 DATE 2/21/2013 SHEET 29 OF 47

This drawing, specifications, and concepts contained here in are the sole property of Dart Aerospace, and may not be reproduced or used in any fashion without the prior written permission of Dart Aerospace Eugene, OR.

REVISIONS

REV	ECR	DESCRIPTION	DATE	INITIAL	APPROVED
4	15-0337	**-51** CH'D DIMS WAS 4X .775 ±.010 IS 4X .775 ±.06, WAS 9.875 IS 9.875 ±.06, WAS 14.313 IS 14.313 ±.25. CH'D TO SHEET METAL TOLERANCE.	10/26/2015	RJC	JAG
6	17-0031	**-51** CH'D DIM WAS 4X .775±.06 IS 4X .78, WAS 9.875±.06 IS 9.88, WAS 14.313±.25 IS 14.563/14.063.	1/24/2017	SM	JAG

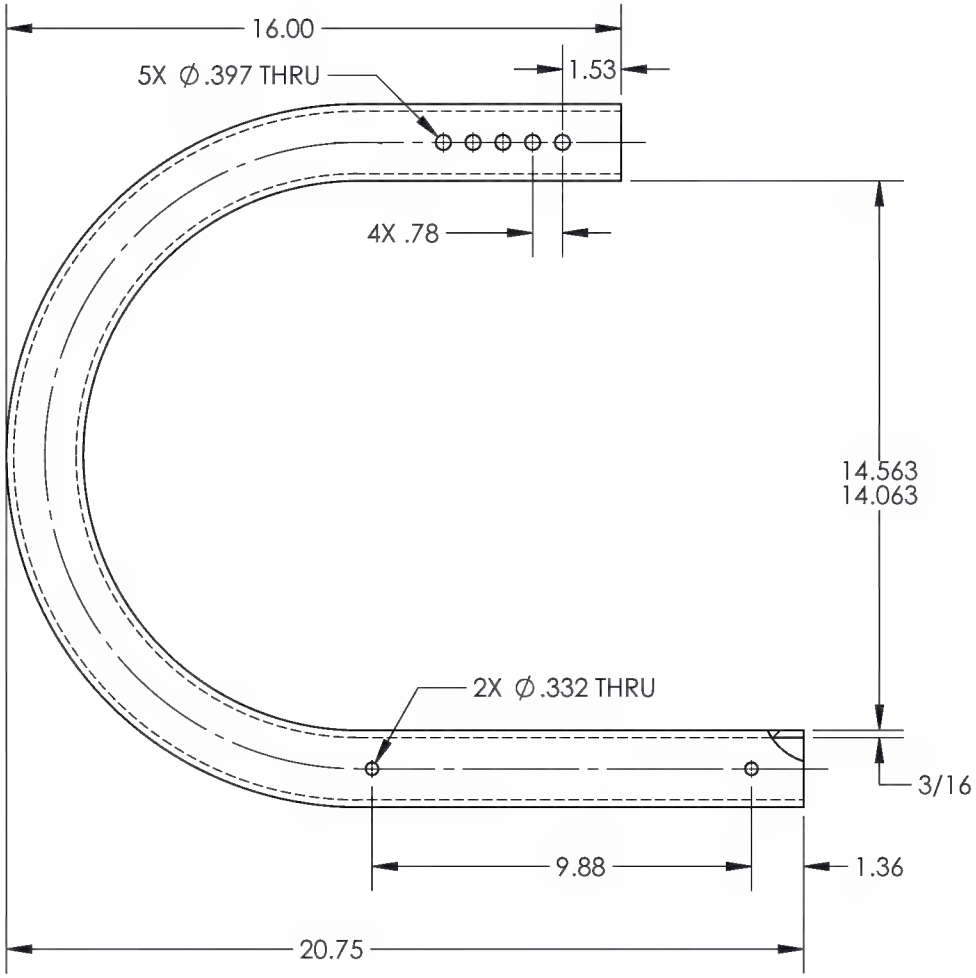

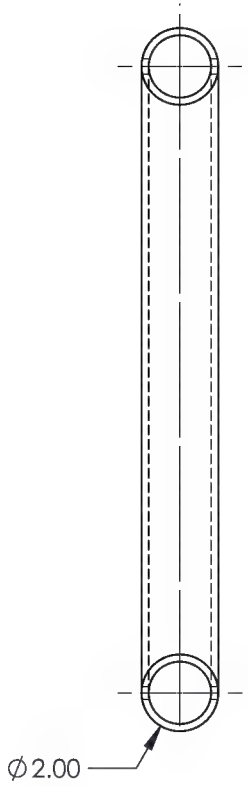

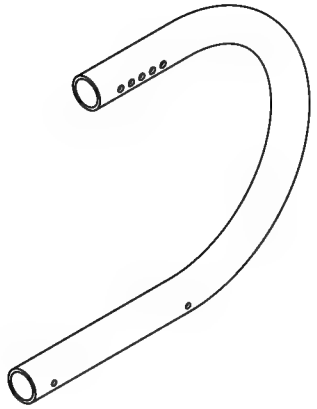

-51

LIFT ARM

DART AEROSPACE

TITLE: TOOL, M/R BLADE LIFTING

DWG NO. RBW6205G00632-3G-51 REV 6

MAT'L 6061
HEAT TREAT
FINISH SEE -50 WELDMENT
SPEC

DRAWN BY: CLOUGH
CHECKED: CLOUGH
OPPS APPR: ANDERSON
QA APPR: LINDSAY
APPROVED: GILBERT

UNLESS OTHERWISE SPECIFIED
DIMENSIONS ARE IN INCHES
.XXX ± .010 FRACTIONS ± 1/8
.XX ± .03 ANGLES ±1°
.X ± .1 SURFACES = 125√
1. BREAK ALL SHARP EDGES .015 x 45° OR .015R
2. DIMENSIONAL LIMITS APPLY AFTER PLATING
3. INTERPRET DIM AND TOL PER ASME Y14.5M-2009

USED ON MODEL: AW139

SCALE 1:5 DATE 6/18/2012 SHEET 30 OF 47

This drawing, specifications, and concepts contained here in are the sole property of Dart Aerospace, and may not be reproduced or used in any fashion without the prior written permission of Dart Aerospace Eugene, OR.

REVISIONS

REV	ECR	DESCRIPTION	DATE	INITIAL	APPROVED
2		**-52** ADDED PART TO REPLACE **-119.**	4/28/20104	DPD	GE
4	15-0337	**-52** CH'D TO SHEET METAL TOLERANCE.	10/26/2015	RJC	JAG

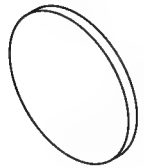

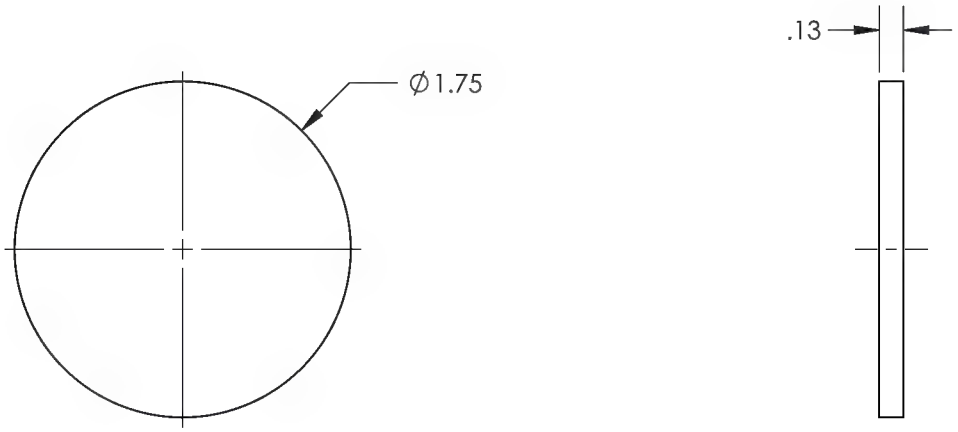

-52

LIFT ARM END CAP

DART AEROSPACE

TITLE
TOOL, M/R BLADE LIFTING

DWG NO. RBW6205G00632-3G-52 REV 6

MAT'L 6061
HEAT TREAT
FINISH SEE -50 WELDMENT
SPEC

DRAWN BY: GILBERT
CHECKED: CLOUGH
OPPS APPR: ANDERSON
QA APPR: LINDSAY
APPROVED: GILBERT

UNLESS OTHERWISE SPECIFIED
DIMENSIONS ARE IN INCHES
.XXX ± .010 FRACTIONS ± 1/8
.XX ± .03 ANGLES ±1°
.X ± .1 SURFACES = 125√
1. BREAK ALL SHARP EDGES .015 x 45° OR .015R
2. DIMENSIONAL LIMITS APPLY AFTER PLATING
3. INTERPRET DIM AND TOL PER ASME Y14.5M-2009

USED ON MODEL
AW139

SCALE 1:1 DATE 2/21/2013 SHEET 31 OF 47

This drawing, specifications, and concepts contained here in are the sole property of Dart Aerospace, and may not be reproduced or used in any fashion without the prior written permission of Dart Aerospace Eugene, OR.

REVISIONS

REV	ECR	DESCRIPTION	DATE	INITIAL	APPROVED
1		**-53** CH'D WIDTH TOLERANCE WAS 2.500 +.010 -.000 IS 2.500 +.05 -.00,CH'D HIEGHT WAS 1.375 IS 1.250, CH'D HOLE LOCATION WAS .688 IS .625, RADIUS WAS .69 IS .63, CH'D THICKNESS WAS .313 IS .25.	7/1/2013	CFS	JAG
4	15-0337	**-53** CH'D TO SHEET METAL TOLERANCE.	10/26/2015	RJC	JAG
5	16-0164	**-53** REMOVED FINISH SPEC.	10/12/2016	SM	JAG
6	17-0031	**-53** CH'D DIM WAS 2.500+.05/-.00 IS 2.55/2.50.	1/24/2017	SM	JAG

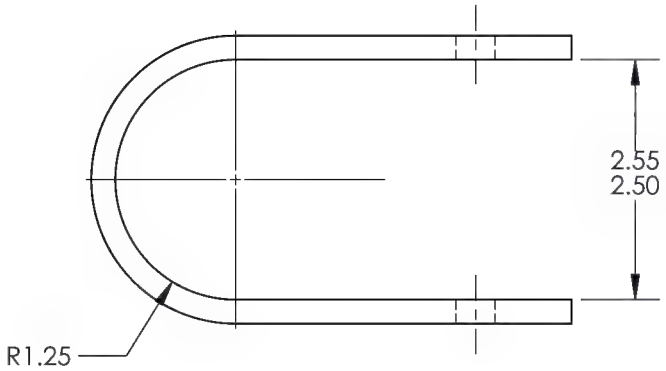

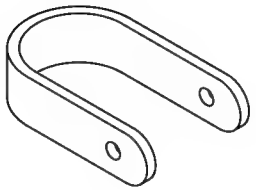

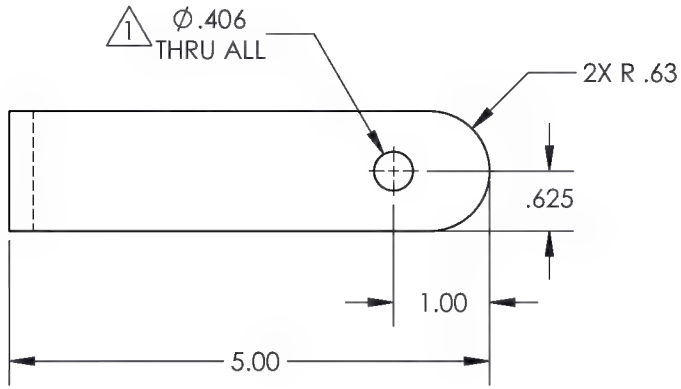

NOTE:

1. HOLE TO BE DRILLED AFTER PART IS FORMED.

-53

CLEVIS

DART AEROSPACE

TITLE: TOOL, M/R BLADE LIFTING

DWG NO. RBW6205G00632-3G-53 REV 6

MAT'L	A-36 P & O
HEAT TREAT	
FINISH	POWDER COAT RED
SPEC	
DRAWN BY:	CLOUGH
CHECKED:	CLOUGH
OPPS APPR:	ANDERSON
QA APPR:	LINDSAY
APPROVED:	GILBERT

UNLESS OTHERWISE SPECIFIED
DIMENSIONS ARE IN INCHES
.XXX ± .010 FRACTIONS ± 1/8
.XX ± .03 ANGLES ±1°
.X ± .1 SURFACES = 125
1. BREAK ALL SHARP EDGES .015 x 45° OR .015R
2. DIMENSIONAL LIMITS APPLY AFTER PLATING
3. INTERPRET DIM AND TOL PER ASME Y14.5M-2009

USED ON MODEL: AW139

SCALE 1:2 | DATE 6/18/2012 | SHEET 32 OF 47

This drawing, specifications, and concepts contained here in are the sole property of Dart Aerospace, and may not be reproduced or used in any fashion without the prior written permission of Dart Aerospace Eugene, OR.

REVISIONS

REV	ECR	DESCRIPTION	DATE	INITIAL	APPROVED
5	16-0164	**-55** REMOVED FINISH SPEC.	10/12/2016	SM	JAG

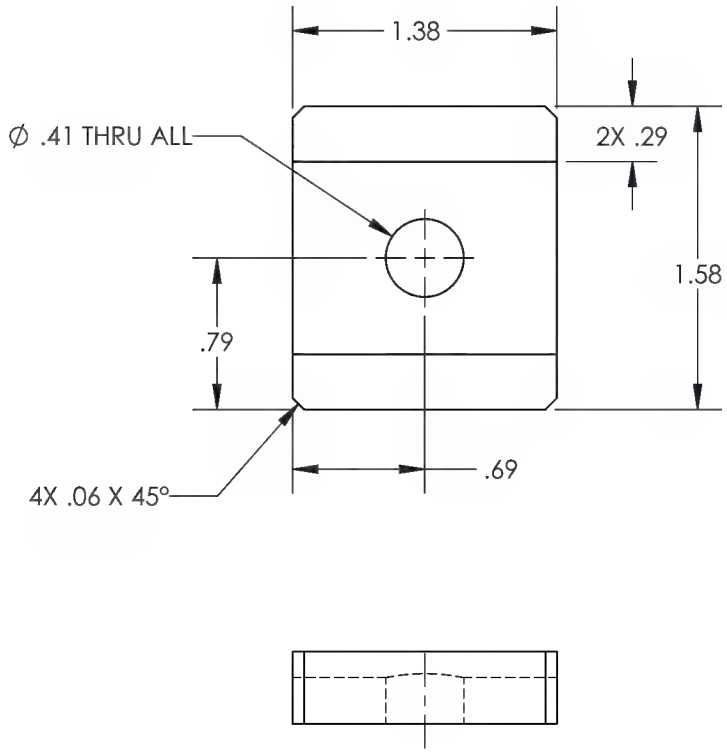

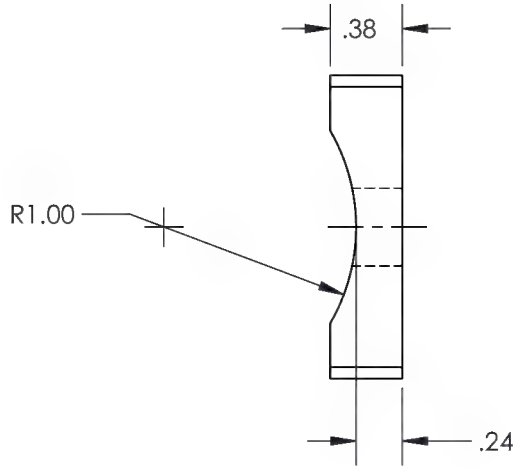

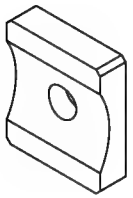

(-55)

SPACER BLOCK

DART AEROSPACE

TITLE
TOOL,M/R BLADE LIFTING

DWG NO. RBW6205G00632-3G-55 REV 6

MAT'L	6061
HEAT TREAT	
FINISH	POWDER COAT RED
SPEC	
DRAWN BY:	CLOUGH
CHECKED:	CLOUGH
OPPS APPR:	ANDERSON
QA APPR:	LINDSAY
APPROVED:	GILBERT

UNLESS OTHERWISE SPECIFIED
DIMENSIONS ARE IN INCHES
.XXX ± .005 FRACTIONS ± 1/8
.XX ± .01 ANGLES ±.5°
.X ± .1 SURFACES = 125√
1. BREAK ALL SHARP EDGES .015 x 45° OR .015R
2. DIMENSIONAL LIMITS APPLY AFTER PLATING
3. INTERPRET DIM AND TOL PER ASME Y14.5M-2009

USED ON MODEL
AW139

SCALE 1:1 | DATE 2/12/2013 | SHEET 33 OF 47

This drawing, specifications, and concepts contained here in are the sole property of Dart Aerospace, and may not be reproduced or used in any fashion without the prior written permission of Dart Aerospace Eugene, OR.

REVISIONS

REV	ECR	DESCRIPTION	DATE	INITIAL	APPROVED
5	16-0164	**-57** REMOVED FINISH SPEC.	10/12/2016	SM	JAG
6	17-0031	**-57** CH'D DIM WAS Ø.41 THRU ALL ∨ Ø.45X90°, NEAR SIDE ∨ Ø.45X90°, FAR SIDE IS Ø.41 THRU ALL ∨ Ø.45X90°, BOTH SIDES; WAS 1.97 IS 1.94.	1/24/2017	SM	JAG

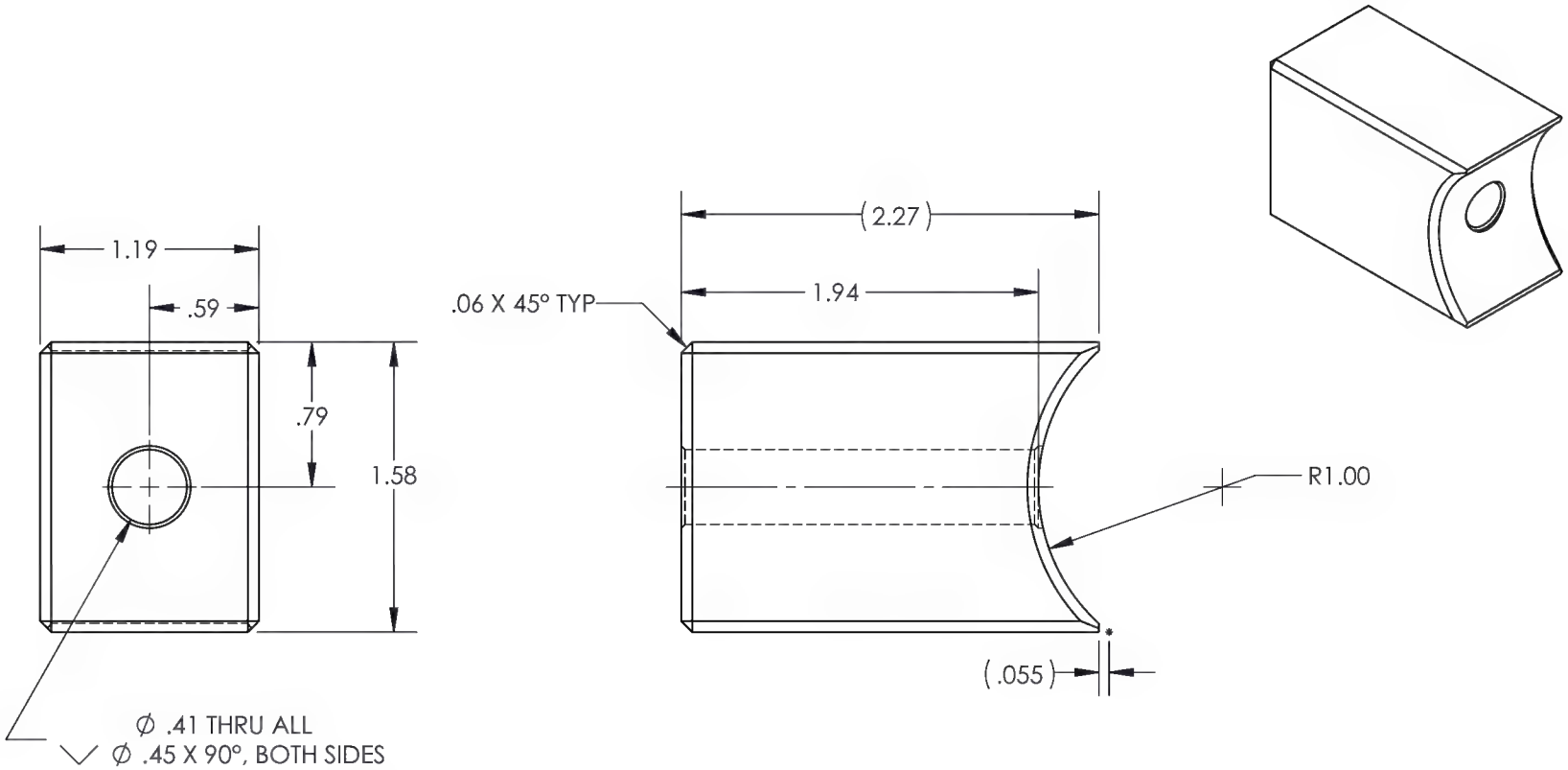

-57

HANDLE BLOCK

DART AEROSPACE

TITLE
TOOL, M/R BLADE LIFTING

DWG NO. RBW6205G00632-3G-57 REV 6

MAT'L 6061
HEAT TREAT
FINISH POWDER COAT RED
SPEC

DRAWN BY: GILBERT
CHECKED: CLOUGH
OPPS APPR: ANDERSON
QA APPR: LINDSAY
APPROVED: GILBERT

UNLESS OTHERWISE SPECIFIED
DIMENSIONS ARE IN INCHES
.XXX ± .005 FRACTIONS ± 1/8
.XX ± .01 ANGLES ±.5°
.X ± .1 SURFACES = 125√
1. BREAK ALL SHARP EDGES .015 x 45° OR .015R
2. DIMENSIONAL LIMITS APPLY AFTER PLATING
3. INTERPRET DIM AND TOL PER ASME Y14.5M-2009

USED ON MODEL
AW139

SCALE 1:1 DATE 2/21/2013 SHEET 34 OF 47

This drawing, specifications, and concepts contained here in are the sole property of Dart Aerospace, and may not be reproduced or used in any fashion without the prior written permission of Dart Aerospace Eugene, OR.

REVISIONS

REV	ECR	DESCRIPTION	DATE	INITIAL	APPROVED
4	15-0337	**-59** CH'D TO SHEET METAL TOLERANCE.	10/26/2015	RJC	JAG
6	17-0031	**-59** CH'D DIM WAS Ø.50 IS Ø.500.	1/24/2017	SM	JAG

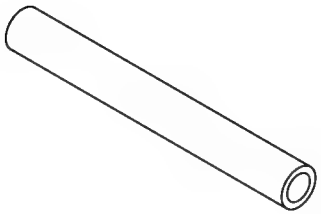

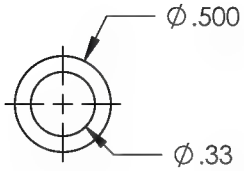

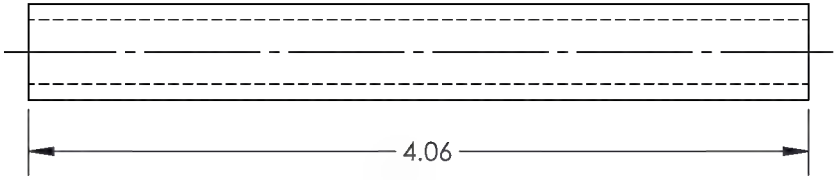

-59

HINGE SPACER

DART AEROSPACE

TITLE TOOL, M/R BLADE LIFTING

DWG NO. RBW6205G00632-3G-59 REV 6

MAT'L	6061
HEAT TREAT	
FINISH	CLEAR ANODIZE
SPEC	MIL-A-8625F, TYPE II, CLASS I
DRAWN BY:	GILBERT
CHECKED:	CLOUGH
OPPS APPR:	ANDERSON
QA APPR:	LINDSAY
APPROVED:	GILBERT

UNLESS OTHERWISE SPECIFIED
DIMENSIONS ARE IN INCHES
.XXX ± .010 FRACTIONS ± 1/8
.XX ± .03 ANGLES ±1°
.X ± .1 SURFACES = 125√

1. BREAK ALL SHARP EDGES .015 x 45° OR .015R
2. DIMENSIONAL LIMITS APPLY AFTER PLATING
3. INTERPRET DIM AND TOL PER ASME Y14.5M-2009

USED ON MODEL: AW139

SCALE 1:1 | DATE 2/26/2013 | SHEET 35 OF 47

This drawing, specifications, and concepts contained here in are the sole property of Dart Aerospace, and may not be reproduced or used in any fashion without the prior written permission of Dart Aerospace Eugene, OR.

REVISIONS

REV	ECR	DESCRIPTION	DATE	INITIAL	APPROVED
4	15-0337	**-61** CH'D TO SHEET METAL TOLERANCE.	10/26/2015	RJC	JAG
6	17-0031	**-61** CH'D DIM WAS Ø.53 IS Ø.527.	1/24/2017	SM	JAG

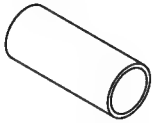

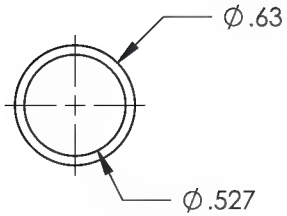

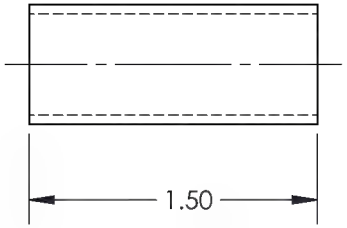

-61

SHORT HINGE SPACER

DART AEROSPACE

TITLE
TOOL, M/R BLADE LIFTING

DWG NO. RBW6205G00632-3G-61 REV 6

MAT'L	6061
HEAT TREAT	
FINISH	CLEAR ANODIZE
SPEC	MIL-A-8625, TYPE II, CLASS I
DRAWN BY:	GILBERT
CHECKED:	CLOUGH
OPPS APPR:	ANDERSON
QA APPR:	LINDSAY
APPROVED:	GILBERT

UNLESS OTHERWISE SPECIFIED
DIMENSIONS ARE IN INCHES
.XXX ± .010 FRACTIONS ± 1/8
.XX ± .03 ANGLES ±1°
.X ± .1 SURFACES = 125√
1. BREAK ALL SHARP EDGES .015 x 45° OR .015R
2. DIMENSIONAL LIMITS APPLY AFTER PLATING
3. INTERPRET DIM AND TOL PER ASME Y14.5M-2009

USED ON MODEL
AW139

SCALE 1:1 | DATE 2/26/2013 | SHEET 36 OF 47

This drawing, specifications, and concepts contained here in are the sole property of Dart Aerospace, and may not be reproduced or used in any fashion without the prior written permission of Dart Aerospace Eugene, OR.

REVISIONS

REV	ECR	DESCRIPTION	DATE	INITIAL	APPROVED
1		**-63** CHANGED MATERIAL NOTE IN BOM.	7/1/2013	CFS	JAG
4	15-0337	**-63** CH'D QTY. WAS 1 IS 2, CH'D TO SHEET METAL TOLERANCE.	10/26/2015	RJC	JAG
5	16-0164	**-63** CH'D B/O INFO WAS 3/4 X 8 X 15-1/8 I.R. SPECIALTIES IS 3/4 X 8 X 15-1/8 (CASE SOLUTIONS).	10/12/2016	SM	JAG
6	17-0031	**-63** CH'D MAT'L WAS 17124 IS T-20.	1/24/2017	SM	JAG

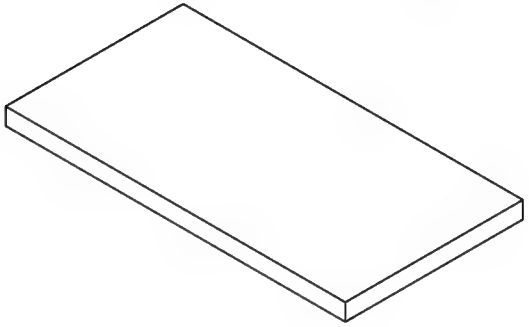

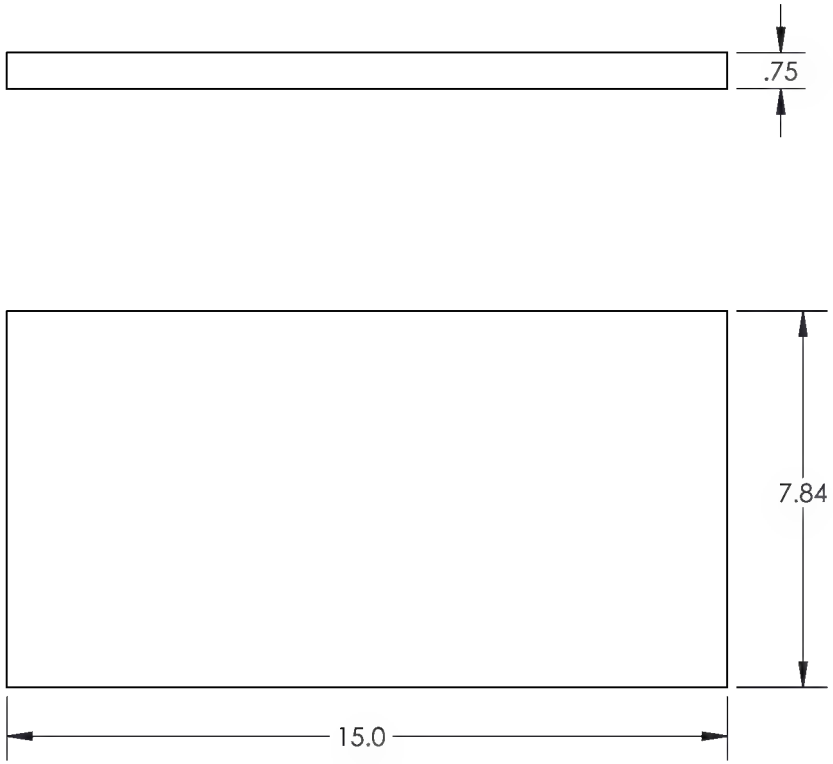

-63

FOAM

DART AEROSPACE

TITLE
TOOL, M/R BLADE LIFTING

DWG NO. RBW6205G00632-3G-63 REV 6

MAT'L T-20
HEAT TREAT
FINISH
SPEC

DRAWN BY: GILBERT
CHECKED: CLOUGH
OPPS APPR: ANDERSON
QA APPR: LINDSAY
APPROVED: GILBERT

UNLESS OTHERWISE SPECIFIED
DIMENSIONS ARE IN INCHES
.XXX ± .010 FRACTIONS ± 1/8
.XX ± .03 ANGLES ±1°
.X ± .1 SURFACES = 125√
1. BREAK ALL SHARP EDGES .015 x 45° OR .015R
2. DIMENSIONAL LIMITS APPLY AFTER PLATING
3. INTERPRET DIM AND TOL PER ASME Y14.5M-2009

USED ON MODEL
AW139

SCALE 1:4 DATE 2/26/2013 SHEET 37 OF 47

This drawing, specifications, and concepts contained here in are the sole property of Dart Aerospace, and may not be reproduced or used in any fashion without the prior written permission of Dart Aerospace Eugene, OR.

REVISIONS

REV	ECR	DESCRIPTION	DATE	INITIAL	APPROVED
1		**-65** CHANGED MATERIAL NOTE IN BOM.	7/1/2013	CFS	JAG
4	15-0337	**-65** CH'D TO SHEET METAL TOLERANCE.	10/26/2015	RJC	JAG
5	16-0164	**-65** CH'D B/O INFO WAS 3/4 X 1-1/8 X 8 I.R. SPECIALTIES IS 3/4 X 1-1/8 X 8 (I.R. SPECIALTIES)	10/12/2016	SM	JAG
6	17-0031	**-65** CH'D MAT'L WAS 17124 IS T-20.	1/24/2017	SM	JAG

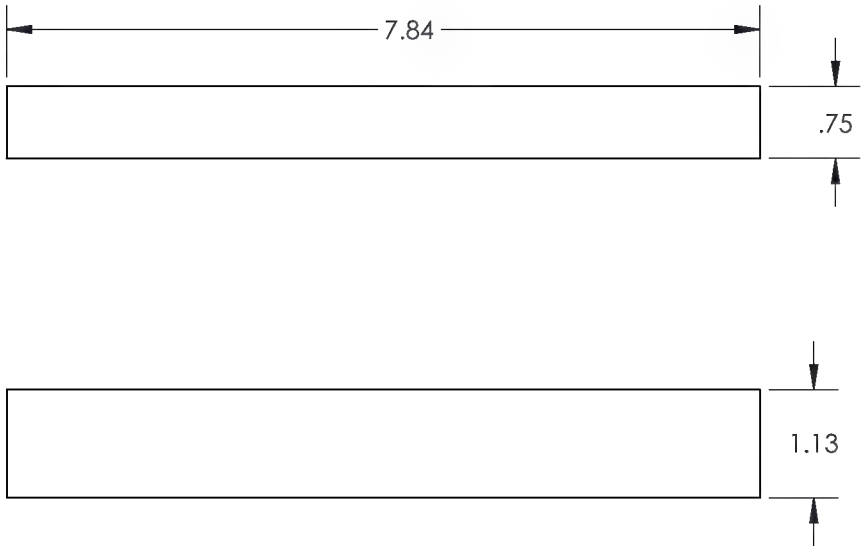

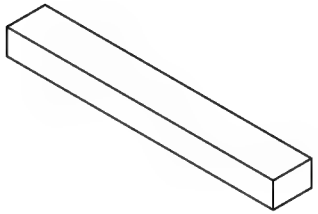

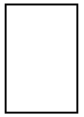

(-65)

FOAM, ANGLE BLOCK

DART AEROSPACE

TITLE
TOOL, M/R BLADE LIFTING

DWG NO. RBW6205G00632-3G-65 REV 6

MAT'L T-20
HEAT TREAT
FINISH
SPEC

DRAWN BY: GILBERT
CHECKED: CLOUGH
OPPS APPR: ANDERSON
QA APPR: LINDSAY
APPROVED: GILBERT

UNLESS OTHERWISE SPECIFIED
DIMENSIONS ARE IN INCHES
.XXX ± .010 FRACTIONS ± 1/8
.XX ± .03 ANGLES ±1°
.X ± .1 SURFACES = 125√
1. BREAK ALL SHARP EDGES .015 x 45° OR .015R
2. DIMENSIONAL LIMITS APPLY AFTER PLATING
3. INTERPRET DIM AND TOL PER ASME Y14.5M-2009

USED ON MODEL
AW139

SCALE 1:2 DATE 2/27/2013 SHEET 38 OF 47

This drawing, specifications, and concepts contained here in are the sole property of Dart Aerospace, and may not be reproduced or used in any fashion without the prior written permission of Dart Aerospace Eugene, OR.

REVISIONS

REV	ECR	DESCRIPTION	DATE	INITIAL	APPROVED
4	15-0337	**-67** CH'D TO SHEET METAL TOLERANCE.	10/26/2015	RJC	JAG
6	17-0031	**-67** CH'D MAT'L WAS 17124 IS T-20.	1/24/2017	SM	JAG

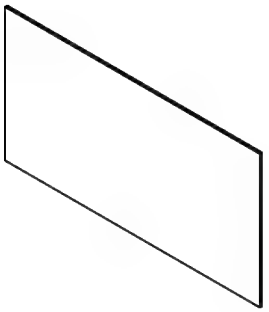

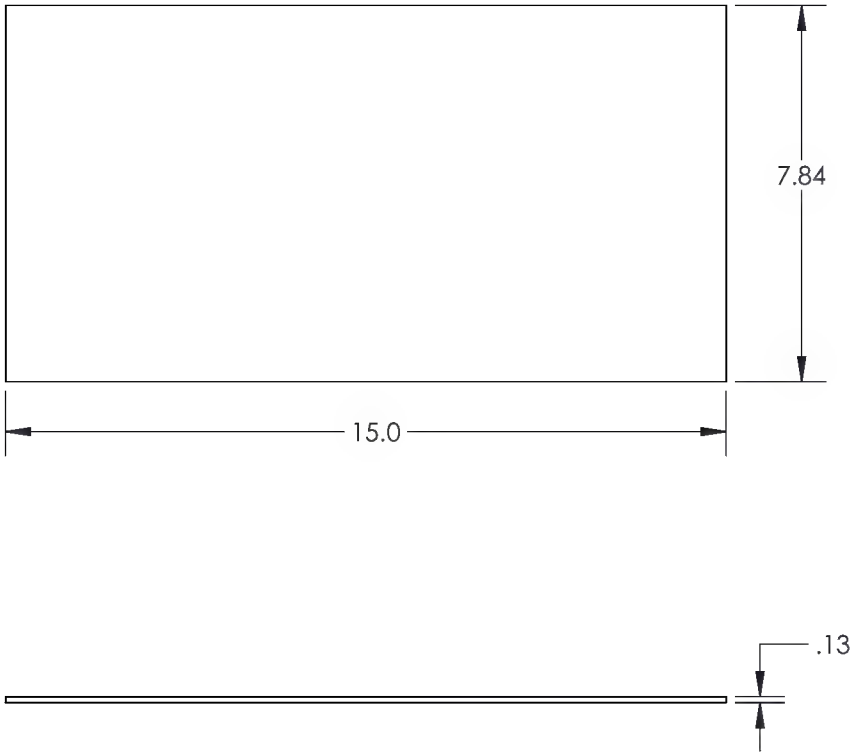

-67

FOAM BACKING

DART AEROSPACE

TITLE
TOOL, M/R BLADE LIFTING

DWG NO. RBW6205G00632-3G-67 REV 6

MAT'L NEOPRENE
HEAT TREAT
FINISH
SPEC

UNLESS OTHERWISE SPECIFIED
DIMENSIONS ARE IN INCHES
.XXX ± .010 FRACTIONS ± 1/8
.XX ± .03 ANGLES ±1°
.X ± .1 SURFACES = 125√

1. BREAK ALL SHARP EDGES .015 x 45° OR .015R
2. DIMENSIONAL LIMITS APPLY AFTER PLATING
3. INTERPRET DIM AND TOL PER ASME Y14.5M-2009

DRAWN BY:	GILBERT
CHECKED:	CLOUGH
OPPS APPR:	ANDERSON
QA APPR:	LINDSAY
APPROVED:	GILBERT

USED ON MODEL
AW139

SCALE 1:4 DATE 2/27/2013 SHEET 39 OF 47

This drawing, specifications, and concepts contained here in are the sole property of Dart Aerospace, and may not be reproduced or used in any fashion without the prior written permission of Dart Aerospace Eugene, OR.

REVISIONS

REV	ECR	DESCRIPTION	DATE	INITIAL	APPROVED

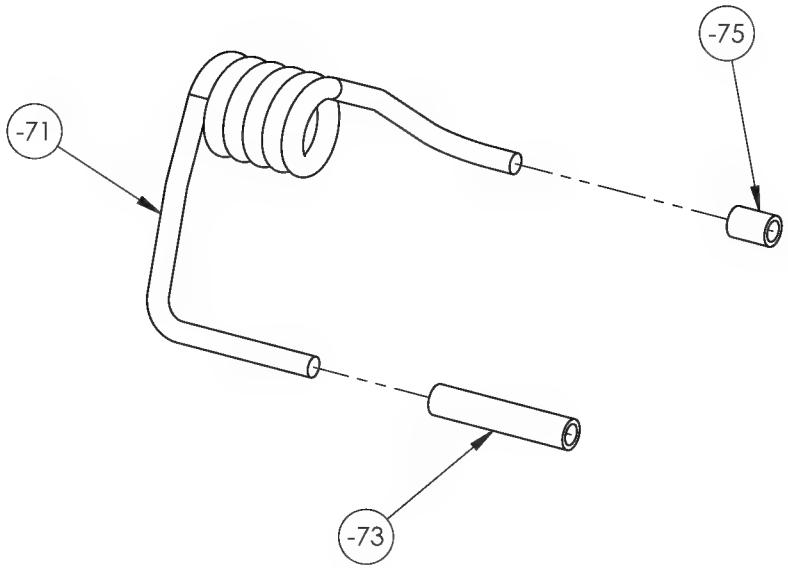

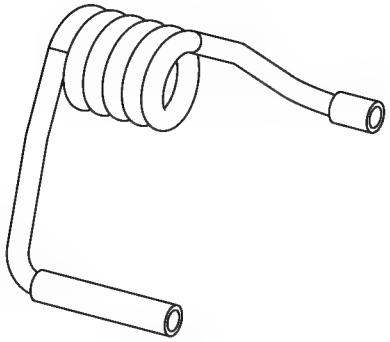

-69

SPRING ASSEMBLY

DART AEROSPACE

TITLE: TOOL, M/R BLADE LIFTING

DWG NO. RBW6205G00632-3G-69 REV 6

MAT'L
HEAT TREAT
FINISH
SPEC

UNLESS OTHERWISE SPECIFIED
DIMENSIONS ARE IN INCHES
.XXX ± .005 FRACTIONS ± 1/8
.XX ± .01 ANGLES ±.5°
.X ± .1 SURFACES = 125√

1. BREAK ALL SHARP EDGES .015 x 45° OR .015R
2. DIMENSIONAL LIMITS APPLY AFTER PLATING
3. INTERPRET DIM AND TOL PER ASME Y14.5M-2009

DRAWN BY:	GILBERT
CHECKED:	CLOUGH
OPPS APPR:	ANDERSON
QA APPR:	LINDSAY
APPROVED:	GILBERT

USED ON MODEL: AW139

SCALE 1:1.5 | DATE 3/20/2013 | SHEET 40 OF 47

This drawing, specifications, and concepts contained here in are the sole property of Dart Aerospace, and may not be reproduced or used in any fashion without the prior written permission of Dart Aerospace Eugene, OR.

REVISIONS

REV	ECR	DESCRIPTION	DATE	INITIAL	APPROVED
1		**-71** ADDED NOTE 1 FOR ADDITIONAL SPRING INFORMATION. MATERIAL WAS STEEL IS S.S.	7/10/2013	RJC	DW
2		**-71** ADDED NOTE 2 FOR ADDITIONAL SPRING INFORMATION.	4/28/2014	DPD	RJC
3	15-0017	**-71** WIRE DIAMETER CH'D PER DENDOFF WAS Ø.155 IS Ø.170.	1/20/2015	RJC	JAG
4	15-0337	**-71** DELETED NOTES 1 AND 2.	10/26/2015	RJC	JAG

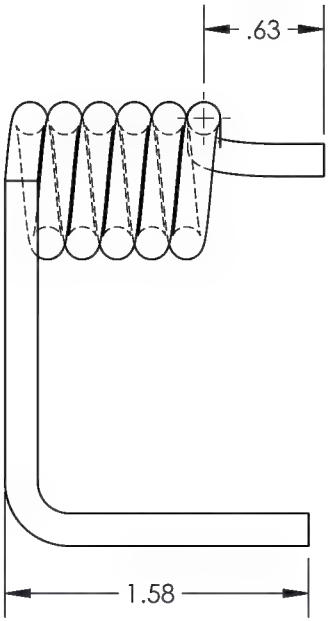

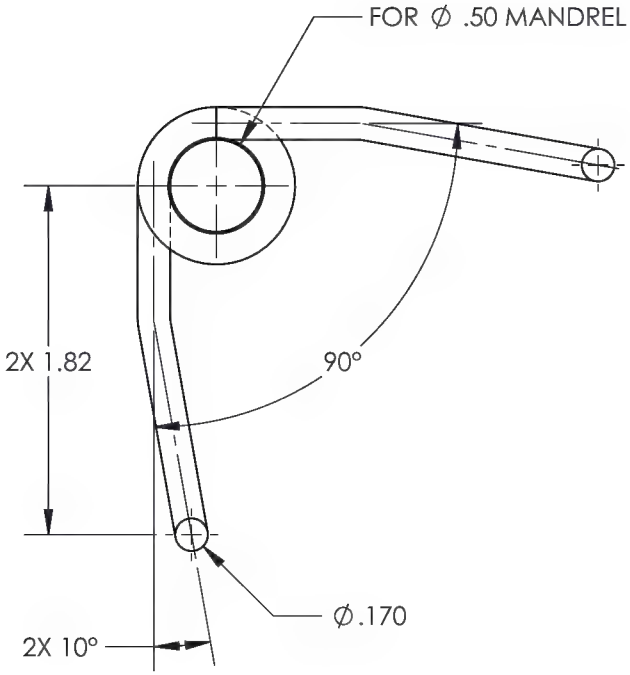

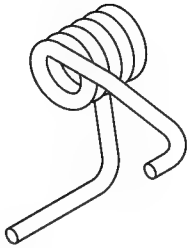

(-71)

SPRING

DART AEROSPACE

TITLE
TOOL, M/R BLADE LIFTING

DWG NO. RBW6205G00632-3G-71 REV 6

MAT'L S.S.
HEAT TREAT
FINISH
SPEC

DRAWN BY: GILBERT
CHECKED: CLOUGH
OPPS APPR: ANDERSON
QA APPR: LINDSAY
APPROVED: GILBERT

UNLESS OTHERWISE SPECIFIED
DIMENSIONS ARE IN INCHES
.XXX ± .005 FRACTIONS ± 1/8
.XX ± .01 ANGLES ±.5°
.X ± .1 SURFACES = 125√
1. BREAK ALL SHARP EDGES .015 x 45° OR .015R
2. DIMENSIONAL LIMITS APPLY AFTER PLATING
3. INTERPRET DIM AND TOL PER ASME Y14.5M-2009

USED ON MODEL
AW139

SCALE 1:1 DATE 2/26/2013 SHEET 41 OF 47

This drawing, specifications, and concepts contained here in are the sole property of Dart Aerospace, and may not be reproduced or used in any fashion without the prior written permission of Dart Aerospace Eugene, OR.

REVISIONS

REV	ECR	DESCRIPTION	DATE	INITIAL	APPROVED
3	15-0017	**-73** CH'D TUBE ID WAS Ø.150 IS Ø.170, P/N WAS 5548K918 IS 5548K64.	1/20/2015	RJC	JAG
4	15-0337	**-73** CH'D TO SHEET METAL TOLERANCE.	10/26/2015	RJC	JAG

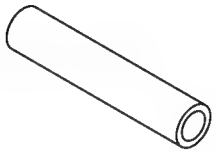

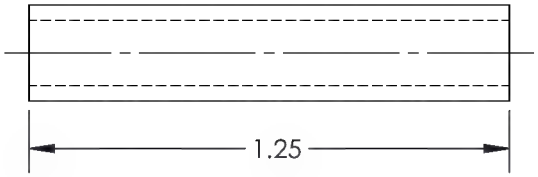

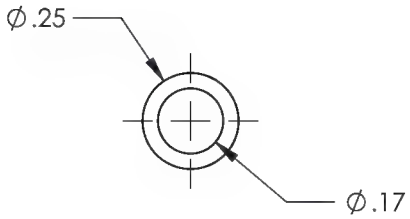

-73

TUBE, LONG

DART AEROSPACE

TITLE
TOOL, M/R BLADE LIFTING

DWG NO. RBW6205G00632-3G-73 REV 6

MAT'L NYLON
HEAT TREAT
FINISH
SPEC

UNLESS OTHERWISE SPECIFIED
DIMENSIONS ARE IN INCHES
.XXX ± .010 FRACTIONS ± 1/8
.XX ± .03 ANGLES ±1°
.X ± .1 SURFACES = 125√
1. BREAK ALL SHARP EDGES .015 x 45° OR .015R
2. DIMENSIONAL LIMITS APPLY AFTER PLATING
3. INTERPRET DIM AND TOL PER ASME Y14.5M-2009

DRAWN BY:	GILBERT
CHECKED:	CLOUGH
OPPS APPR:	ANDERSON
QA APPR:	LINDSAY
APPROVED:	GILBERT

USED ON MODEL
AW139

SCALE 2:1 DATE 3/20/2013 SHEET 42 OF 47

This drawing, specifications, and concepts contained here in are the sole property of Dart Aerospace, and may not be reproduced or used in any fashion without the prior written permission of Dart Aerospace Eugene, OR.

REVISIONS

REV	ECR	DESCRIPTION	DATE	INITIAL	APPROVED
1		**-75** ADDED MISSING P/N BUBBLE.	7/1/2013	CFS	JAG
3	15-0017	**-75** CH'D TUBE ID WAS Ø.150 IS Ø.170, P/N WAS 5548K918 IS 5548K64.	1/20/2015	RJC	JAG
4	15-0337	**-75** CH'D TO SHEET METAL TOLERANCE.	10/26/2015	RJC	JAG

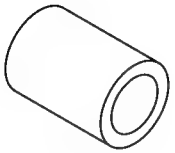

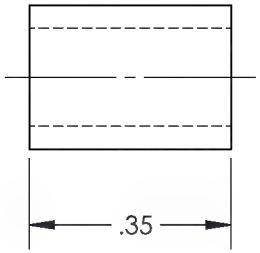

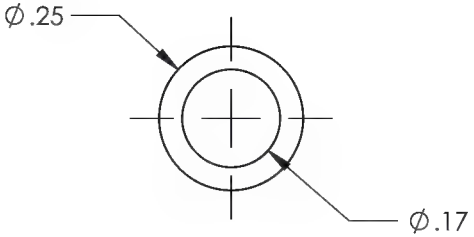

-75

TUBE, LONG

DART AEROSPACE

TITLE
TOOL, M/R BLADE LIFTING

DWG NO. RBW6205G00632-3G-75 REV 6

MAT'L NYLON
HEAT TREAT
FINISH
SPEC

UNLESS OTHERWISE SPECIFIED
DIMENSIONS ARE IN INCHES
.XXX ± .010 FRACTIONS ± 1/8
.XX ± .03 ANGLES ±1°
.X ± .1 SURFACES = 125√
1. BREAK ALL SHARP EDGES .015 x 45° OR .015R
2. DIMENSIONAL LIMITS APPLY AFTER PLATING
3. INTERPRET DIM AND TOL PER ASME Y14.5M-2009

DRAWN BY:	GILBERT
CHECKED:	CLOUGH
OPPS APPR:	ANDERSON
QA APPR:	LINDSAY
APPROVED:	GILBERT

USED ON MODEL
AW139

SCALE 3:1 DATE 3/20/2013 SHEET 43 OF 47

This drawing, specifications, and concepts contained here in are the sole property of Dart Aerospace, and may not be reproduced or used in any fashion without the prior written permission of Dart Aerospace Eugene, OR.

REVISIONS

REV	ECR	DESCRIPTION	DATE	INITIAL	APPROVED

ARIAL FONT, HT: .50

MAX LOAD 150 LBS

-77

STICKER

DART AEROSPACE

TITLE	TOOL, M/R BLADE LIFTING
DWG NO.	RBW6205G00632-3G-77
REV	6
MAT'L	VINYL, BLACK
HEAT TREAT	
FINISH	
SPEC	
DRAWN BY:	GILBERT
CHECKED:	CLOUGH
OPPS APPR:	ANDERSON
QA APPR:	LINDSAY
APPROVED:	GILBERT

UNLESS OTHERWISE SPECIFIED
DIMENSIONS ARE IN INCHES
.XXX ± .005 FRACTIONS ± 1/8
.XX ± .01 ANGLES ±.5°
.X ± .1 SURFACES = 125√

1. BREAK ALL SHARP EDGES .015 x 45° OR .015R
2. DIMENSIONAL LIMITS APPLY AFTER PLATING
3. INTERPRET DIM AND TOL PER ASME Y14.5M-2009

USED ON MODEL: AW139

SCALE	1:1	DATE 2/28/2013	SHEET 44 OF 47

This drawing, specifications, and concepts contained here in are the sole property of Dart Aerospace, and may not be reproduced or used in any fashion without the prior written permission of Dart Aerospace Eugene, OR.

REVISIONS

REV	ECR	DESCRIPTION	DATE	INITIAL	APPROVED
1		**-113** ADDED DRAWING TO MANUFACTURE PART.	7/10/13	RJC	JAG
4	15-0337	**-113** CH'D TO SHEET METAL TOLERANCE.	10/29/2015	RJC	JAG

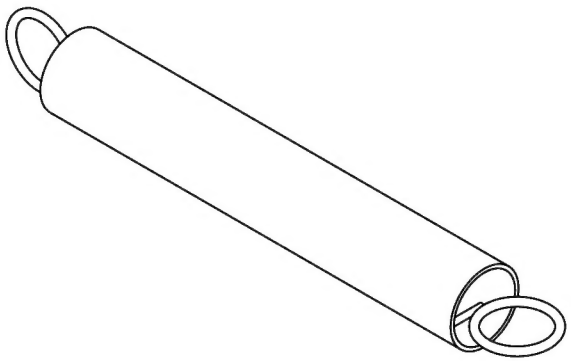

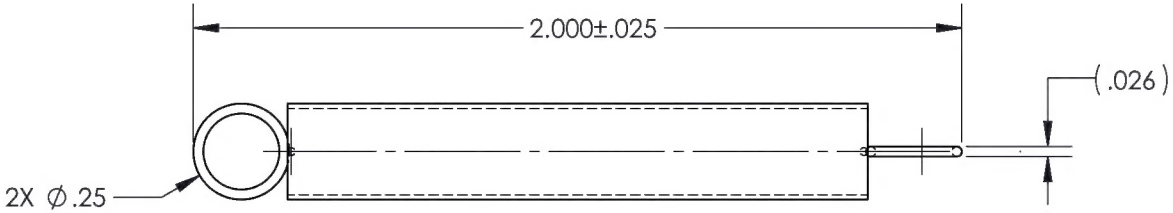

-113

LATCH SPRING

DART AEROSPACE

TITLE
TOOL, M/R BLADE LIFTING

DWG NO. RBW6205G00632-3G-113 REV 6

MAT'L 302 S.S.
HEAT TREAT
FINISH
SPEC

DRAWN BY: CLOUGH
CHECKED: CLOUGH
OPPS APPR: ANDERSON
QA APPR: LINDSAY
APPROVED: GILBERT

UNLESS OTHERWISE SPECIFIED
DIMENSIONS ARE IN INCHES
.XXX ± .010 FRACTIONS ± 1/8
.XX ± .03 ANGLES ±1°
.X ± .1 SURFACES = 125√
1. BREAK ALL SHARP EDGES .015 x 45° OR .015R
2. DIMENSIONAL LIMITS APPLY AFTER PLATING
3. INTERPRET DIM AND TOL PER ASME Y14.5M-2009

USED ON MODEL

SCALE 1:1 DATE 7/10/2013 SHEET 45 OF 47

This drawing, specifications, and concepts contained here in are the sole property of Dart Aerospace, and may not be reproduced or used in any fashion without the prior written permission of Dart Aerospace Eugene, OR.

REVISIONS

REV	ECR	DESCRIPTION	DATE	INITIAL	APPROVED
3	15-0017	**-133** ADDED FOAM PAD.	1/20/2015	RJC	JAG
4	15-0337	**-133** CH'D TO SHEET METAL TOLERANCE.	10/26/2015	RJC	JAG

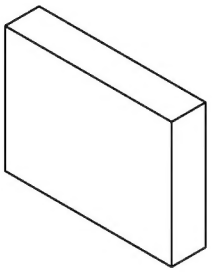

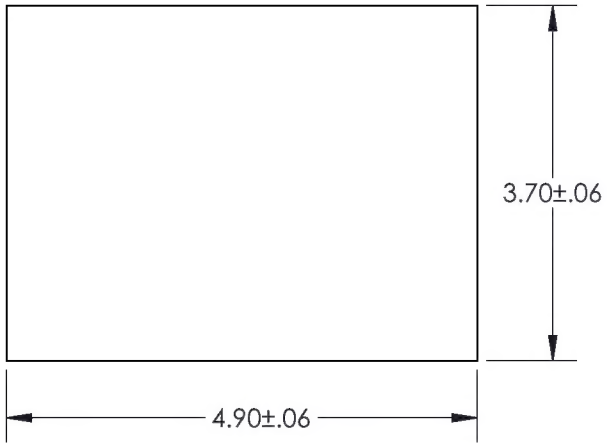

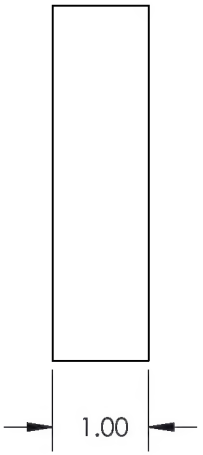

-133

FOAM PAD

DART AEROSPACE

TITLE
TOOL, M/R BLADE LIFTING

DWG NO. RBW6205G00632-3G-133 REV 6

MAT'L Y20 BLACK
HEAT TREAT
FINISH
SPEC

DRAWN BY: CLOUGH
CHECKED: CLOUGH
OPPS APPR: ANDERSON
QA APPR: LINDSAY
APPROVED: GILBERT

UNLESS OTHERWISE SPECIFIED
DIMENSIONS ARE IN INCHES
.XXX ± .010 FRACTIONS ± 1/8
.XX ± .03 ANGLES ±1°
.X ± .1 SURFACES = 125√
1. BREAK ALL SHARP EDGES .015 x 45° OR .015R
2. DIMENSIONAL LIMITS APPLY AFTER PLATING
3. INTERPRET DIM AND TOL PER ASME Y14.5M-2009

USED ON MODEL
AW139

SCALE 1:1 DATE 1/20/2015 SHEET 46 OF 47

This drawing, specifications, and concepts contained here in are the sole property of Dart Aerospace, and may not be reproduced or used in any fashion without the prior written permission of Dart Aerospace.

REVISIONS

REV	ECR	DESCRIPTION	DATE	INITIAL	APPROVED

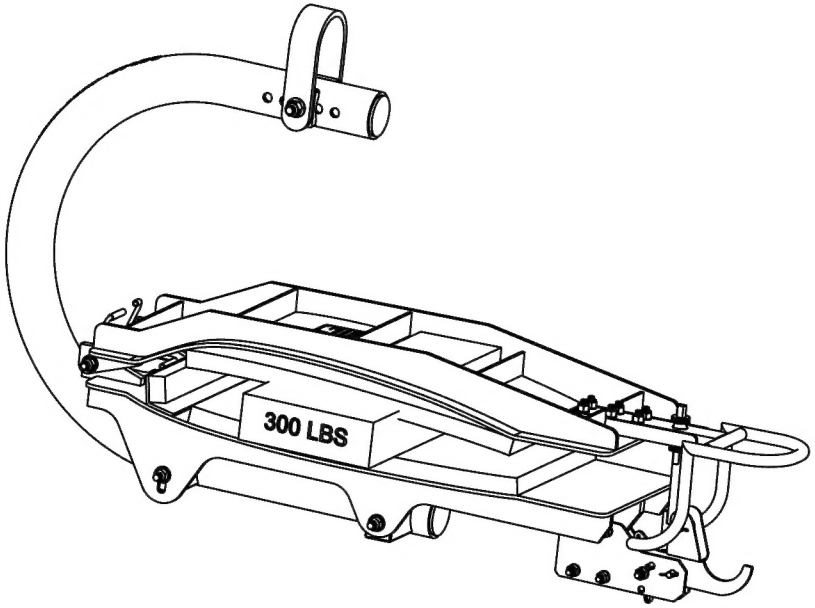

FIRST ARTICLE WEIGHT TEST

INSPECTION & TESTING PROCEDURES FOR THE
RBW6205G00632-3G, M/R BLADE LIFTING TOOL.
THIS ASSEMBLY IS DESIGNED TO LIFT A MAIN ROTOR.
THIS ASSEMBLY SHOULD BE INSPECTED BEFORE EACH USE.
REPLACE ANY ITEMS THAT ARE DAMAGED OR SUSPECTED
OF DAMAGE BEFORE USING!

FIRST ARTICLE WEIGHT TEST

1. AFTER INSPECTION, PLACE 300 LBS. IN M/R BLADE LIFTING TOOL. LIFT M/R BLADE LIFTING TOOL USING AN APPROPRIATE LIFTING DEVICE, FOR AT LEAST 5 MINUTES, CONTINUALLY CHECKING FOR CRACKS, DEFLECTION, OR DISTORTION.
3. REMOVE WEIGHT AND RE-INSPECT TOOL, CHECKING FOR STRESS CRACKS, BENDING, OR DISTORTIONS.

INSPECTOR:_____

TESTER:_____

S.N.:_____

DATE:_____

DART AEROSPACE
190 S. Danebo Ave., Eugene, OR. 97402
1-800-556-4166
e-mail: sales@dartaero.com
dartaerospace.com

TITLE		
TOOL, M/R BLADE LIFTING		
DWG NO. RBW6205G00632-3G	REV 6	CUSTOMER 1 OF 1
SCALE 1:8	DATE 2/21/2013	SHEET 47 OF 47